March 1994
16-50038-101

Bally®

The Addams Family™

SPECIAL COLLECTORS EDITION

Commemorating the Best Selling Pinball Machine of all Time.

Operations Manual Includes:
Operations & Adjustments, Testing & Problem Diagnosis,
Parts Information, Reference Diagrams & Schematics

Midway Manufacturing Company
3401 North California Avenue
Chicago, Illinois 60618

Jumper Charts

Display	W1	W2
1MEG, 2MEG, 4 MEG EPROM	In	Out
512K, 1 MEG EPROM	Out	In

Country	W14	W15	W16	W17	W18
America	In	In	In	In	In
European	In	In	Out	In	In
French	In	In	In	Out	In
German	In	In	In	In	Out

Solenoid/Flasher Table

Sol. No.	Function	Solenoid Type	Wire Color	Connection	Driver Trnstr	Solenoid/Flashlamp Type
01	Chair Kickout	High Power	Vio-Brn	J130-1	Q82	AE-26-1200
02	Thing Knocker	High Power	Vio-Red	J132-2	Q80	AE-23-800
03	Ramp Diverter	High Power	Vio-Orn	J130-4	Q78	AE-26-1500
04	Ball Release	High Power	Vio-Yel	J130-5	Q76	AE-26-1200
05	Outhole	High Power	Vio-Grn	J130-6	Q64	AE-27-1200
06	Thing Magnet	High Power	Vio-Blu	J130-7	Q66	A-12158-1
07	Thing Kickout	High Power	Vio-Blk	J130-8	Q68	AE-23-800
08	Lockup Kickout	High Power	Vio-Gry	J130-9	Q70	AE-26-1200
09	Upper Left Jet	Low Power	Brn-Blk	J127-1	Q58	AE-26-1200
10	Upper Right Jet	Low Power	Brn-Red	J127-3	Q56	AE-26-1200
11	Center Left Jet	Low Power	Brn-Org	J127-4	Q54	AE-26-1200
12	Center Right Jet	Low Power	Brn-Yel	J127-5	Q52	AE-26-1200
13	Lower Jet	Low Power	Brn-Grn	J127-6	Q50	AE-26-1200
14	Left Slingshot	Low Power	Brn-Blu	J127-7	Q48	AE-27-1200
15	Right Slingshot	Low Power	Brn-Vio	J127-8	Q46	AE-27-1200
16	Left Magnet*	Low Power	Brn-Gry	J127-9	Q44	20-9247 12V
17	Telephone/Upper Right Ramp	Flasher	Blk-Brn	J126-1 J125-1	Q42	#906
18	Train/Upper Left Ramp	Flasher	Blk-Red	J126-2 J125-2	Q40	#906
19	Lower Ramp/Jet Bumpers (2)	Flasher	Blk-Org	J126-3 J125-3	Q38	#906
20	Left Lightning Bolt/Mini Flipper	Flasher	Blk-Yel	J126-4 J125-5	Q36	#906
21	Right Lightning Bolt/Swamp	Flasher	Blu-Grn	J126-5 J125-6	Q28	#906
22	The Power/Backbox Clowd (3)	Flasher	Blu-Blk	J126-6 J125-7	Q30	#906
23	Upper Magnet*	Low Power	Blu-Vio	J126-7 J125-8	Q34	20-9247 12V
24	Right Magnet*	Low Power	Blu-Gry	J126-8 J125-9	Q32	20-9247 12V
25	Thing Motor	Flasher	Blu-Brn	J122-1	Q26	14-7966 12V
26	Thing Eject Hole	Flasher	Blu-Red	J122-2	Q24	AE-27-1200
27	Bookcase Motor	Flasher	Blu-Org	J122-3	Q22	14-7969 12V
28	Swamp Release	Flasher	Blu-Yel	J122-4	Q20	AE-30-2000
	G. I. Circuits					
01	Left Playfield String	G.I.	Brown	J120-1	Q18	#44
02	Insert House String	G.I.	Orange	J120-2	Q10	#555
03	Insert People String	G.I.	Yellow	J120-3	Q14	#555
04	Not Used	G.I.	Green	J121-5	Q16	
05	Right Playfield String	G.I.	Violet	J121-6	Q12	#44
	Upper Left Flipper		Gry-Yel	J109-5		FL-11753
	Upper Right Flipper		Blu-Yel	J109-7		FL-11630
	Lower Left Flipper		Gry-Yel	J109-5		FL-15411
	Lower Right Flipper		Blu-Yel	J109-7		FL-15411

*Magnet fuse is a 5 Amp S.B. located on the underside of the playfield.

Midway Manufacturing Company reserves the rights to make modifications and improvements to its products. The specifications and parts identified in this manual are subject to change without notice.

New Game Features In
Addams Family Special Collectors Edition

The Gold Special Collectors Edition has some added game play features that the original Addams Family did not have. Long term Addams Family players will have a great deal of fun discovering the new game play additions. The major changes include:

1. The addition of gold colored components as follows...

   A. The cabinet side armor.
   B. The front hand protector.
   C. The legs on the game.
   D. "Things" box at the rear of the playfield.
   E. The bookcase in the center of the playfield.
   F. The center ramp wire form.
   G. The bottom arch artwork.
   H. The cabinet artwork.

   A numbered and engraved plaque will be affixed to the front of each cabinet. Finally a certificate of authenticity will be included with each game.

2. The addition of Gomez and Morticia speech that was not included in the original game. In going back to our original studio tapes we discovered many phrases we would have liked to have included in the early version. By adding sound/music memory to the Special Collectors Edition, we have been able to include this "lost speech".

3. The game changes include the addition of the "Buy-In" button. This will allow more players to "Tour The Mansion" than was possible before.

4. Game play features include...

   A. "Cousin Its" hideout.
      In the game over sequence, the player sees Cousin It hiding many objects. These objects are "discovered" by the player by entering the mansion rooms. These objects award everything from points to lighting the "specials".

   B. Wednesday and Pugsleys secret passage.
      When a player enters the 3 million room in the mansion, they will discover the passage and move to a separate random room that will also be awarded.

   C. Extra Dot matrix displays.
      We have added game play memory to the original version.

These and other small changes make the Special Collectors Edition Some "Thing" Special In Pinball!

IMPORTANT NOTICE

PLEASE READ

This pinball game is equipped with a SAFETY FEATURE to prevent shocks from the solenoid circuit when the coin door is opened. A new interlock switch assembly (part no. A-17077), located at the left of the coin door opening, has been added to this game. This assembly is a bracket containing the existing memory protect switch on the bottom and a new interlock switch on the top. When the coin door is opened, this new interlock switch opens, breaking the connection to the +50V and +20V winding of the transformer secondary.

A special tool called the Service Switch Actuator is provided for the serviceman/technician that repairs the game. This tool is painted yellow and located in a bag stapled inside the cabinet. The Service Switch Actuator slips over the interlock switch and holds it closed while the coin door is opened, allowing the serviceman to test and repair the solenoid circuit.

Hold the top interlock switch in, then slide the short end of the Service Switch Actuator over the top of the interlock switch bracket and the long end over the center of the switch plunger to hold it in.

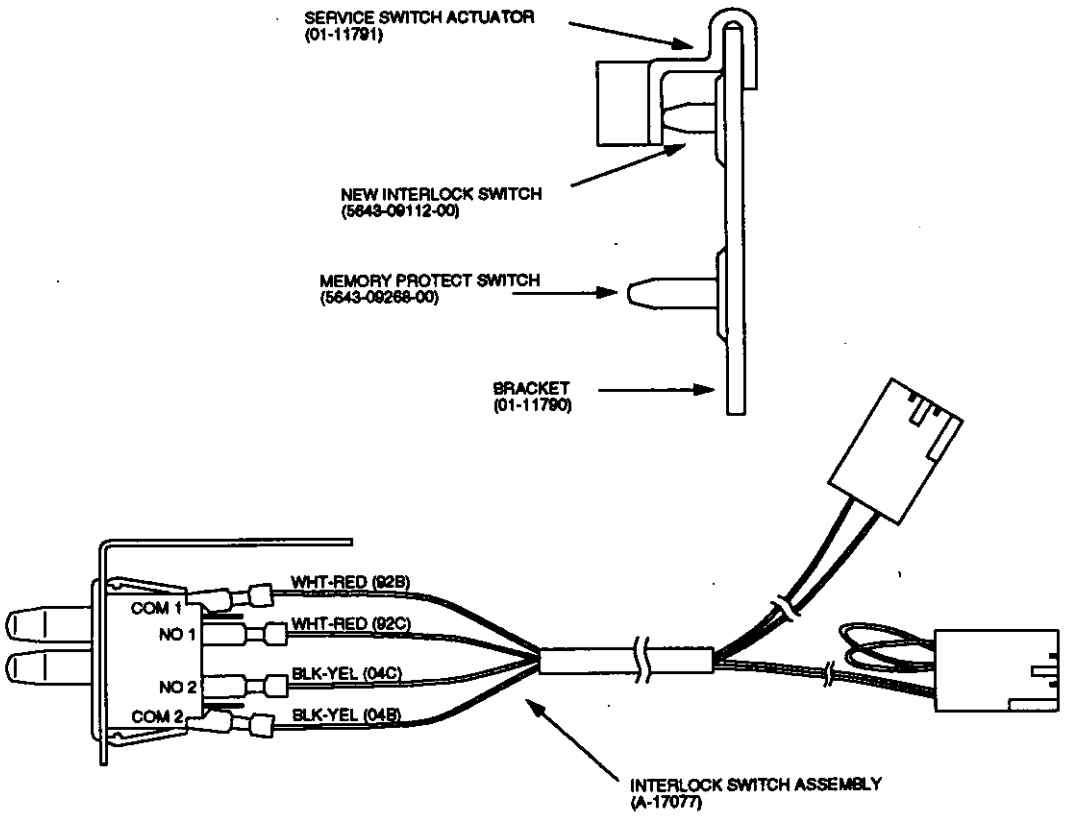

The ADDAMS FAMILY

SPECIAL COLLECTORS EDITION

Midway Manufacturing Company reserves the rights to make modifications and improvements to its products.

The specifications and parts identified in this manual are subject to change without notice.

Table of Contents

Game Rules & Playfield Shots....A-F
Section 1 - Game Operation & Test Information
(System WPC) ROM Summary....1-1
Pinball Game Assembly Instructions....1-2
Pinball Assembly, Playfield Pitch Angle and Leg Levelers Detail
Game Control Locations....1-5
Game Operation....1-6
Menu System Operation....1-8
Main Menu....1-9
Bookkeeping Menu....1-9
B.1 Main Audits....1-10
B.2 Earnings Audits....1-10
B.3 Standard Audits....1-11
B.4 Feature Audits....1-12
B.5 Histograms....1-13
B.6 Time-Stamps....1-14
Printouts Menu....1-15
Test Menu....1-16
T.1 Switch Edges Test....1-16
T.2 Switch Levels Test....1-16
T.3 Single Switches Test....1-17
T.4 Solenoid Test....1-17
T.5 Flasher Test....1-18
T.6 G.I. Test....1-18
T.7 Sound and Music Test....1-19
T.8 Single Lamp Test....1-19
T.9 All Lamps Test....1-20
T.10 Lamp and Flasher Test....1-20
T.11 Display Test....1-20
T.12 Thing Test....1-21
T.13 Bookcase Test....1-21
Utilities Menu....1-22
U.1 Clear Audits....1-22
U.2 Clear Coins....1-22
U.3 Reset H.S.T.D....1-22
U.4 Set Time & Date....1-22
U.5 Custom Message....1-22
U.6 Set Game I.D....1-23
U.7 Factory Adjustments....1-23
U.8 Factory Reset....1-23
U.9 Presets....1-23
Game Difficulty Table for U.S./Canadian/French and German /Europe....1-24
Preset U.S./Canadian Games....1-25
Preset German/European Games....1-27
Preset French Games....1-28
U.10 Clear Credits....1-29
U.11 Auto Burn-In....1-29
U.12 New Location....1-29
Adjustment Menu....1-30
A.1 Standard Adjustments....1-30
A.2 Feature Adjustments....1-36
A.3 Pricing Adjustments....1-40
Pricing Table....1-43
A.4 H.S.T.D. Adjustments....1-44
A.5 Printer Adjustments....1-46
Problem Analysis....1-47
CPU Board & Sound Board Error Codes....1-48
LED List....1-49
Fuse List....1-50
Maintenance Information....1-51
Notes....1-52

Section 2 - Game Parts Information 2-1
Backbox Assembly 2-2
Cabinet Parts 2-3
WPC CPU Board 2-4
WPC Audio Board 2-5
Flipper Controller Assy 2-6
Dot Matrix Controller 2-7
WPC Power Driver Board 2-8
Extra Flipper Supply Board, WPC Coin Door Interface Board 2-10
High Power Driver Board, Motor EMI Board 2-11
2-Opto Switch Assy, 5-Switch & Diode Assy 2-12
7-Switch Opto Assy, Flipper Opto Assy 2-13
Flipper Assy's 2-14
Outhole Kicker Assy 2-16
Ball Shooter Lane Feeder Assy 2-17
Jumper Bumper Assy. 2-18
Kickers Arm (Slingshots) 2-19
Kicker Assy's 2-20
Knockoff Assy, Eject Assy. 2-21
Knocker Assy, Diverter Assy 2-22
Coil Magnet & Bracket Assy, Coil Magnet & Bracket Assy 2-23
Ball Trough Switch Plate Assy 2-24
Ball Shooter Assy 2-25
Kickout Assy 2-26
Hand Drive Assy 2-27
Chair Bracket Assy, Loop Assy 2-28
Lockup Loop Assy 2-29
Bookcase Assy 2-30
Line Filter Assy 2-32
Target Assy 2-33
Unique Parts 2-34
Cables 2-35
Metal Plastic Posts 2-36
Upper Playfield Parts 2-38
Lower Playfield Parts 2-40
Switch Locations 2-41
Lamp Locations 2-42
Solenoid/Flasher Locations 2-43
Rubber Rings 2-44
Ramps 2-45
Notes 2-46

Section 3 - Wiring Diagrams and Schematics 3-1
Lamp Matrix 3-2
Lamp Matrix Connections & Circuit Drawing 3-3
Switch Matrix Connections & Switch Matrix 3-4
Switch Circuit Drawing 3-5
Solenoid/Flasher Table 3-6
Solenoid/Flasher Circuit Drawing 3-7
Solenoid Wiring 3-9
Flipper & Lane Change Schematic 3-10
Extra Flipper Supply Schematic 3-11
Flipper Opto P.C.B. Assembly 3-12
Motor EMI, 4 I.R. LED and Opto Schematic 3-13
7 Opto Switch Schematic 3-14
High Power Schematic 3-15
Coin Door Interface Board Schematic 3-16
Switch & Lamp Circuits Interboard Wiring 3-17
Solenoid Circuits Interboard Wiring 3-18
Flipper Circuits Interboard Wiring 3-19
G.I., Power & Logic Circuits Interboard Wiring 3-20
Display & Sound Circuits Interboard Wiring 3-21

©Copyright 1991 MIDWAY Manufacturing Company

The ADDAMS FAMILY

"THING FLIPS" FEATURE, RULES & PLAYFIELD SHOT MAPS

"Thing Flips"
Automatic Calibration

The "Thing Flips" feature is an exclusive Williams/Bally pinball innovation.

Using advanced artificial intelligence systems, the game will learn to shoot the ball into the swamp from the upper left flipper. The feature is enabled by coming through the far left flipper return lane (labeled "Lite Thing Flips").

This will lite the "Thing Flips" arrow that points up the center ramp. If the center ramp is hit while this arrow is flashing, the ball will be diverted to the upper left mini-flipper and the game ("Thing") will attempt to shoot the ball into the swamp. Once the game has "learned" the specifics of the game, (slope, dirt, flipper power, etc.) it will successfully make the shot between 50-60% of the time. This is several times better than the best players are able to achieve.

The game continually monitors the performance and compensates for changes. When the game 1st begins gathering data, it quickly learns to be "in the ballpark", then it slowly refines its ability to make the shot. When the game is moved from one location to another it will eventually learn the new shot regardless of intervention, but it is possible to speed up the process by either:

a) A Full Factory Reset (Function U.8)
b) Executing "NEW LOCATION" (Function U.12)

Remember, when fully calibrated, the "Thing Flips" feature will successfully make the shot between 50-60% of the time. The BEST players make the shot under 20% of the time (this is a VERY difficult shot).

If after awhile, your game is not successfully making the shot as often as expected, check the operation of the opto, (switch 57 above the upper left mini-flipper), the 3 Swamp Targets (switches 45, 47, and 48), and the upper "Swamp Lock" switch (switch 71). The program relies on these switches to calibrate the system. Also check the upper left flipper for proper operation.

After setting the game up on location, it will automatically calibrate itself over time. If you would like to speed up this process:

1. Setup game ON LOCATION. Set the pitch and level. Calibrating the game before it is sent to its final location may help, but could actually slow down the process.

2. Activate function U.12 (New Location). This will clear out any previously learned data.

3. With the glass off, manually throw the ball up the SIDE RAMP (labeled Super Jackpot). Repeat this four times.

4. After pressing the left flipper return lane rollover (Lite Thing Flips), throw the ball up the center ramp. It will be diverted and "Thing" will shoot toward the swamp.

   Repeat this process (left flipper lane followed by center ramp) at least 30 times. After 30 attempts, it should be at a level where it will make at least 40% of its shots. The more shots you make, the more accurate it will become. It takes several HUNDRED shots for the machine to fine tune its ability to make the shot.

MANSION AWARDS RULES

There are 13 possible MANSION AWARDS. Each window of the MANSION has a different value or set of rules that can occur when awarded. Please see the diagram for the numbering from 1 to 13.

1. This window awards 3 Million points.

2. This window sets the Jet Bumpers (GRAVEYARD) to their maximum value.

3. **Hit Cousin It.** This starts a timed sequence where all targets award a special point value which can be RAISED by hitting the COUSIN IT target at (S).

4. **The Manushka.** This starts a timed sequence where all targets score a special point value.

5. This window scores 6 Million points.

6. **Quick Multi-ball.** This lights THING so that he will take the current ball in play and start Quick Multi-ball. In quick multi-ball, the Bookcase opens at (K) so that any shot to the Vault (L) scores MILLION PLUS.

7. **Festers Tunnel Hunt.** This starts a timed sequence where shots should be made to the three tunnels (G) (H) (L), in any order. These score 5, 10 and 15 Million points.

8. **Seance.** This starts a timed sequence where the player trys to shoot any three ramp shots. This is the only time a single ball causes the POWER of the ADDAMS FAMILY to appear.

9. This window awards 9 Million points.

10. **Thing.** This window starts a timed sequence where the player trys to get the ball to THING. If succesfull a point value is awarded and the Bookcase opens for a version of Quick Multi-ball. In Quick Multi-ball, any shot to the VAULT awards the original point value over and over again!

11. **Raise the Dead.** This starts a timed sequence where the player trys to get the ball into the Jet Bumpers (GRAVEYARD). Each Jet Bumper has a counter that decrements each time it is hit. If the counter reaches 0, then that spirit has been "Raised", and 5 Million points are awarded.

12. **Light Extra Ball.** This window lights THING to award an Extra Ball.

13. **?.** When all other windows are lit, this window will light to award 50 Million points, light the Specials, and begin re-awarding all other Mansion values in a special sequence.

SHOT MAPS / GAME RULES

SKILL SHOT: The plunger skill shot is made to THINGS EJECT SAUCER at (A). It awards 2 Million plus 1 addtional Million for each subsequent Skill Shot.

EXTRA BALL: There are four possible Extra Balls that can be awarded in the ADDAMS FAMILY. The first and second are lit by "Bear Kick" shots around the Center Staircase (ramp) at (B). Extra Ball is always collected by shooting the ball to THINGS EJECT SAUCER. (A). A third Extra Ball is lit from the possible MANSION AWARDS at (D). The fourth Extra Ball is lit after multiple TRAIN WRECKS from the Train Wreck feature shot at (E).

MANSION AWARDS: The available Mansion Awards are at (D) on the playfield. The currently lit award is changed by the Jet Bumpers (F). The awards are COLLECTED when the yellow lamp is lit on the ELECTRIC CHAIR (G) and the ball is shot to either the Electric Chair or the SWAMP KICKOUT (H). The yellow lamp is re-lit when the ball passes thru the right flipper lane (J). Please see the rules for the individual awards below.

MULTI-BALL: Hitting the BOOKCASE (K) spells the word G-R-E-E-D. When GREED has been spelled, the Bookcase will swing open to reveal the shot to the VAULT (L). Balls may be LOCKED at any one of the flashing LOCK arrows. When two balls have been locked, the third ball is put into play and MULTI-BALL can be started by shooting the ball into the VAULT (L) or into the ELECTRIC CHAIR (G). During the attempted release sequence the POWER of the ADDAMS FAMILY can be seen as the ball passes over the central portion of the playfield.

JACKPOT: While in MULTI-BALL any shot made to the TRAIN WRECK SHOT (E) will score single JACKPOT. Any shot made to the Left Staircase (ramp) at (N) scores a multiple of the Jackpot value depending on how many balls were LOCKED into the Vault directly prior to Multi-ball. Once the Jackpot shot on the ramp is made, the BOOKCASE (K) will open. A shot made into the Vault can re-light the JACKPOT ARROWS for another Jackpot.

THINGS REMATCH: If two balls are lost during Multi-ball before a JACKPOT is scored, then THINGS EJECT HOLE (A) lights for a restart of Multi-ball. If the player gets the ball to THING in the time period allowed, Thing will take the ball and Multi-ball will be restarted.

TRAIN WRECK: Multiple shots to the standup target at (E) produce TRAIN-WRECKS. Train wrecks hold the players current GRAVEYARD VALUE from the Jet Bumpers and award incrementing point values.

GRAVEYARD VALUE: Any shot into the Jet Bumpers increases the GRAVEYARD VALUE. This value is a one ball value unless it has been carried over because of a TRAIN WRECK. The GRAVEYARD VALUE is COLLECTED by any ball that goes into the SWAMP (P). Five times the GRAVEYARD VALUE can be collected by shooting the ball into the SWAMP with THINGS MINI-FLIPPER (Q).

THING FLIPS: Any ball thay goes thru the left outer flipper lane (R) and is then shot around the Center Staircase (B) will be diverted to THINGS MINI-FLIPPER (Q). The game will AUTOMATICALLY FLIP ON ITS OWN and attempt to shoot the ball into the SWAMP!!!!

T-H-I-N-G AWARD: Every time a ball is shot into THINGS EJECT HOLE (A), a letter is added to the THING spellout on the speaker display panel. When T-H-I-N-G has been spelled, the next shot to Thing will activate the Hand and 5 Million will be scored. If a player can do it again, then 10 Million etc., will be scored.

ADDAMS FAMILY

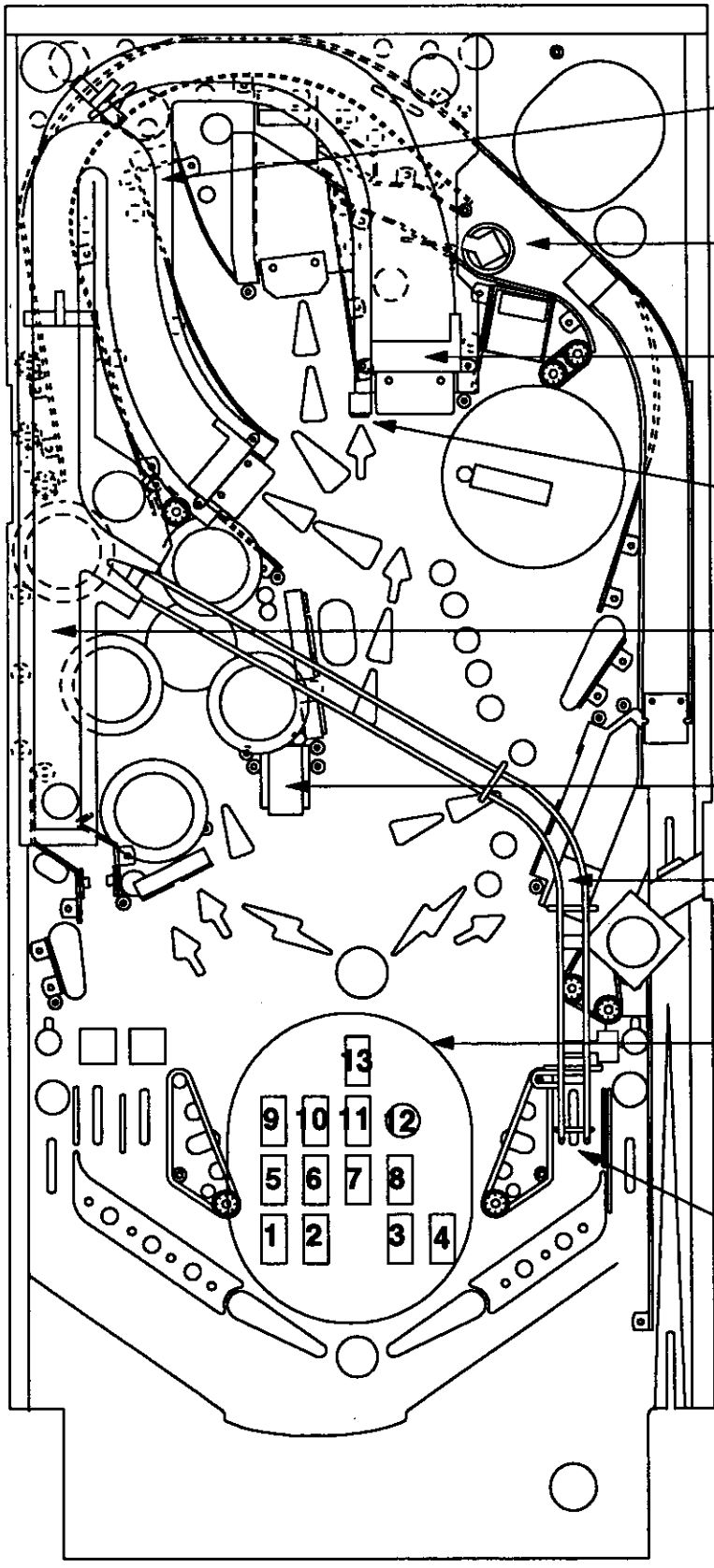

(E) Train Wreck Shot

(A) Things Eject Saucer

(B) Center Staircase

(C) Thing Mini-Ramp

(F) Jet Bumper Graveyard

(G) Electric Chair

(H) Swamp Kickout

(D) Mansion Awards

(J) Right Flipper Lane

ADDAMS FAMILY

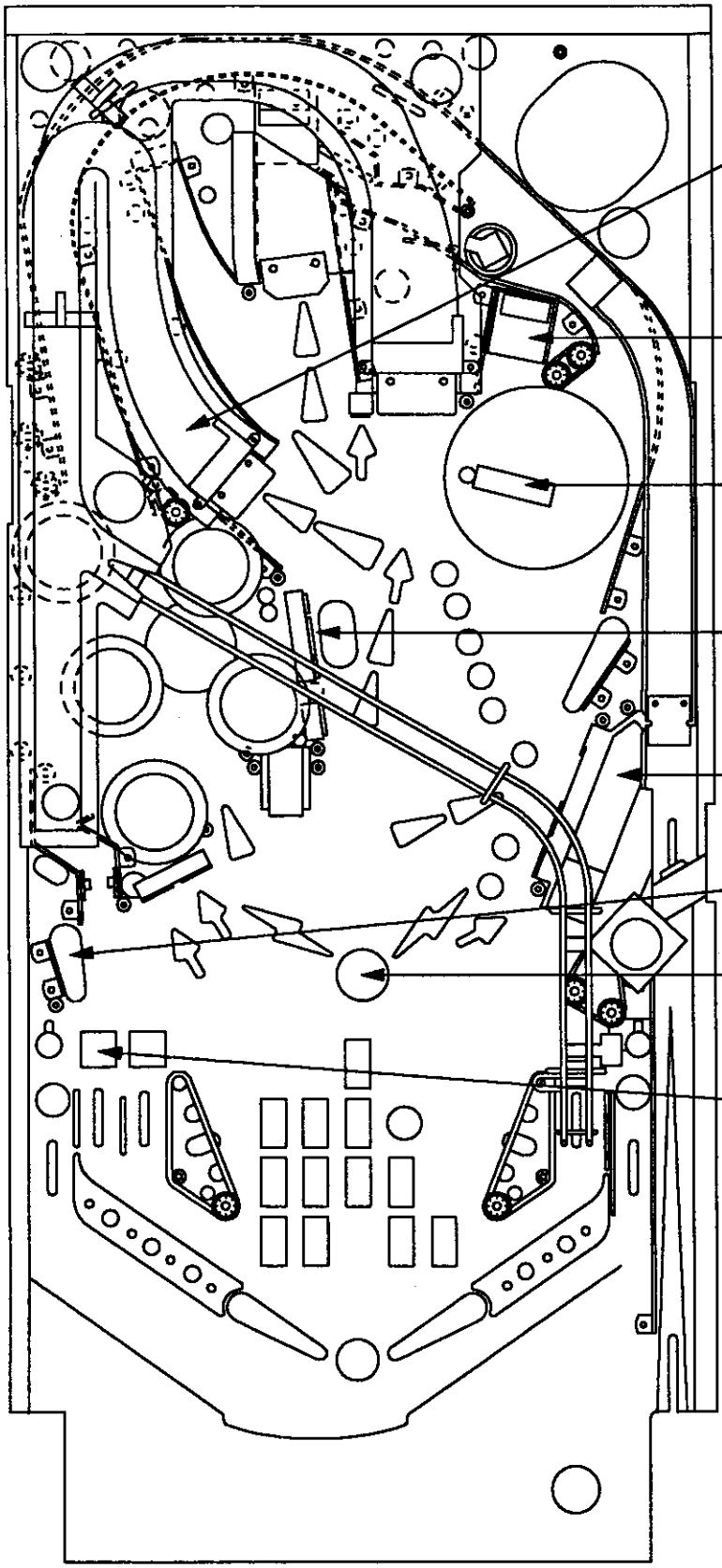

(N) Left Staircase

(L) Vault Shot

(K) Bookcase

(S) Cousin It

(P) Swamp

(Q) Things Mini-Flipper

(M) Power of the ADDAMS FAMILY

(R) Left Outer Flipper Lane

Section 1

Game Operation & Test Information

- **The ADDAMS FAMILY Special Collectors Edition (System WPC) ROM Summary**
- **Pinball Game Assembly Instructions**
- **Game Play**
- **Menu System Operation**

Adjustments
Audits
Test/Diagnostic Procedures
Utilities

(System WPC) ROM Summary

IC	TYPE	LOCATION	BOARD	PART NUMBER
Game ROM	27020	U6	CPU	A-5343-50038-1A (domestic)
Game ROM	27020	U6	CPU	A-5343-50038-1X (foreign)
Music/Speech ROM	27040	U15	Sound	A-5343-50038-3
Music/Speech ROM	27040	U18	Sound	A-5343-50038-4

NOTICE
Order replacement ROMs from your authorized **MIDWAY MANUFACTURING CO.** distributor. Specify: (1) part number (if available); (2) ROM label color; (3) ROM level (number) on the label; (4) which game the ROM is used in.

PINBALL GAME ASSEMBLY INSTRUCTIONS

THE ADDAMS FAMILY SPECIAL COLLECTORS EDITION IS A 3 BALL GAME.

Weight: 290 Lbs.	Length: 55" Approx.
Width: 26" Approx.	Height: 85" Approx.

1. Open the shipping container; remove all cartons, parts, and other items, and set them aside.

2. Place the cabinet on a support and attach rear legs using leg bolts. Leg levelers and leg bolts are provided among the parts in the cash box.

3. Attach the front legs (after installing leg levelers), using leg bolts See diagram below.

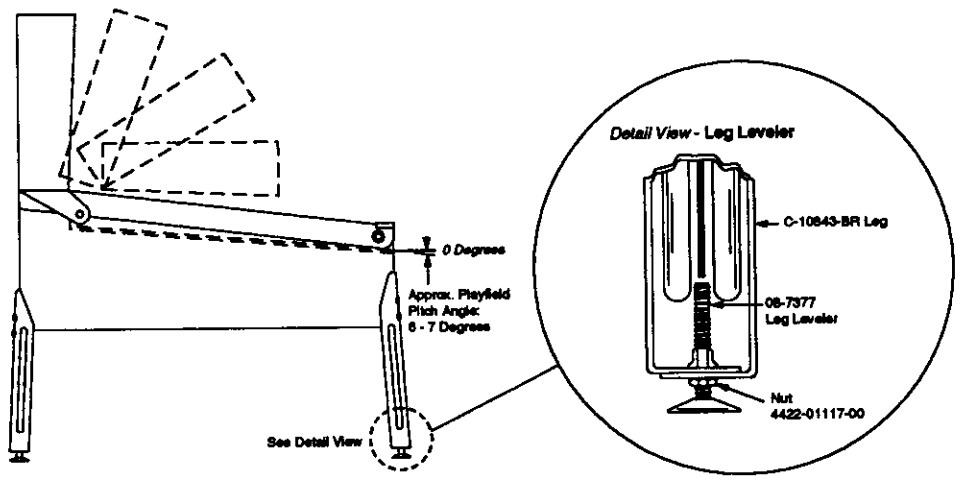

Pinball Assembly, Playfield Pitch Angle, and Leg Leveler Details.

4. Reach into the cabinet and backbox and ensure that the interconnecting cables are free to move (not kinked or pinched). Be careful to avoid damaging wires at any stage of the assembly process.

⚠ CAUTION
FAILURE TO INSTALL the backbox mounting hardware properly can cause personal injury.
NEVER TRANSPORT a pinball game with the hinged backbox erect. Always lower the backbox forward onto the playfield cabinet on a layer of protective material to prevent marring or damage and possible personal injury.

5. Raise the hinged backbox upright and latch it into position. Unlock the backbox, and remove the backglass, storing it carefully to avoid scratches. Remove the shipping block holding the Insert Board. Unlatch and open the Insert Board. This allows access to the bolt holes used for securing the backbox upright. Install the washer-head mounting bolts through the bottom holes of the backbox into the threaded fasteners in the cabinet to secure the backbox. Close the Insert Board and latch it in position. Reinstall the backglass, and lock the backbox.

6. Extend each leg leveler slightly below the leg bottom, so that all four foot pads are extended about the same distance. Remove the cabinet from its support and place it on the floor.

7. Unlock and open the coin door. Locate the Molding Latch Lever, and move the lever toward the left side of the game, to release the Front Molding. Lift the Front Molding off the playfield cover glass return the Latch Lever toward the right, and close the coin door. Carefully slide the glass downward, until it clears the grooves of the Left and Right Side Moldings. Lift the glass up and away from the game, storing it carefully to avoid breakage.

8. Place a level or an inclinometer on the playfield surface. Adjust the leg levelers for proper playfield level (side-to-side) and playfield pitch angle (incline) of approximately 6-7 degrees. NOTE: It is recommended that these measurements be made ON the playfield, not the cabinet nor the playfield cover glass. Tighten the nut on each leg leveler shaft to maintain this setting, as shown in Figure 3.

CAUTION

Playfield pitch angle adjustments can affect the operation of the plunb bob tilt, inside the cabinet. The plumb bob weight is among the parts in the cashbox; the operator should install the weight and adjust this tilt mechanism for proper operation, after completion of the desired playfield pitch angle setting.

9. To attach line cord, remove envelope stapled inside cabinet (near cashbox). Remove the four Phillips-head screws that mount the line cord cover plate to the rear cabinet. Match the prongs on the plug with the holes in the receptacle and push line cord securely into place. Make sure cord aligns with the indentation of plate (indentation should point toward bottom of cabinet). Remount line cord cover plate. If desired, tamper resistant screws are provided in an envelope marked "Security Screws" (located in cashbox) to remount cover plate.

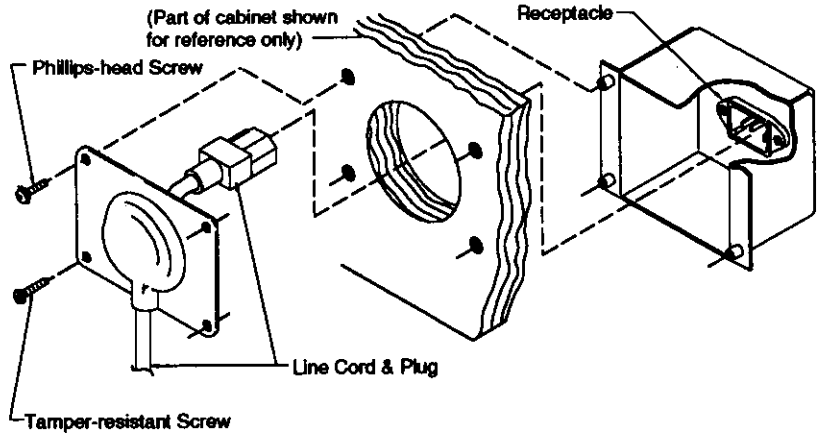

10. Move the game into the desired location; recheck the level and pitch angle of the playfield.

11. Verify that the ***required number*** of balls are installed in the game. **The ADDAMS FAMILY Special Collectors Edition** uses 3 balls.

12. Install playfield mylars if desired.

    NOTE: **The ADDAMS FAMILY Special Collectors Edition** playfield has a special hardcoat surface and does not require a full protective mylar. However, playfield mylars can be purchased thru your local Bally Distributor. Specify part number 03-7960-20017-1 for full playfield mylar.

13. Clean and reinstall the playfield cover glass, reversing the procedure of step 7. Prepare the game for player operation.

GAME CONTROL LOCATIONS

Cabinet Switches

The On-Off switch is located on the bottom of the cabinet near the right front leg.
The Start Button is a pushbutton to the left of the coin door on the cabinet exterior. Press the Start button to begin a game, or during the diagnostic mode, to ask for HELP.

Coin Door Switches

The operator controls all game adjustments, obtains bookkeeping information, and diagnoses problems, using only four pushbutton switches mounted on the inside of the coin door. The Coin Door Switches have two modes of operation Normal Function and Test Function.

Normal Function

The Service Credits switch puts credits on the game that are not included in the game audits.
The Volume Up switch raises the sound level of the game. Press and hold the button until the desired level is reached.
The Volume Down switch lowers the sound level of the game. Press and hold the button until the desired level is reached. See Adjustment A.1 28 to shut sound Off completely.
The Begin Test switch starts the Menu System Operation and changes the Coin Door Switches from Normal Function to Test Function.

Test Function

The Escape switch allows you to get out of a menu selection or return to the Attract Mode.
The Up switch allows you to cycle forward through the menu selections or adjustment choices.
The Down switch allows you to cycle backward through the menu selections or adjustment choices.
The Enter switch allows you to get into a menu selection or lock in an adjustment choice.

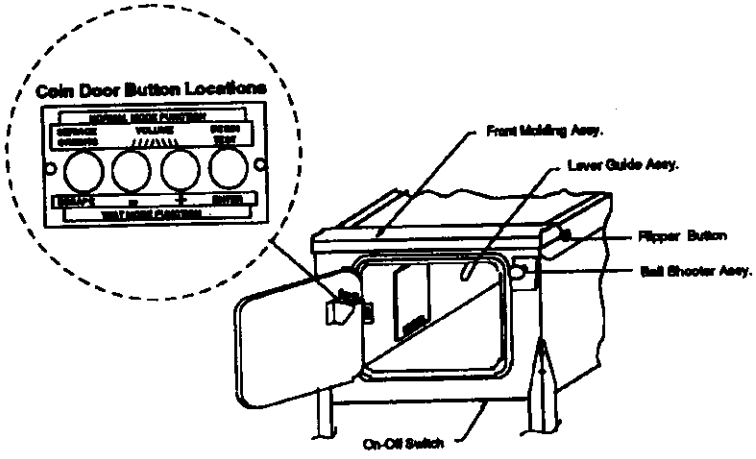

GAME OPERATION

⚠ CAUTION

After assembly and installation at the site location, this game must be plugged into a properly grounded outlet to prevent shock hazard, and to assure proper game operation. DO NOT use a 'cheater' plug to defeat the ground pin on the line cord. DO NOT cut off the ground pin.

POWERING UP. With the coin door closed, plug the game in and switch it On, using the On-Off Switch. In normal operation, Testing will show in the display as the game performs Start-Up Tests. Once the Start-Up Tests have been successfully completed the last score is displayed. Afterward, the game goes into the Attract Mode (playfield and backbox lamps flashing, sounds heard, etc., if the operator does not change the Factory Setting).

Note: After the game has been on location for a period of time, the Start-Up Tests may contain messages concerning game problems. The section entitled 'Problem Analysis Messages' contains more detail concerning messages displayed at each game turn-on.

Open the coin door and press the Begin Test Switch. The display shows the game name, game number and game software revision. The message changes. The display shows the sound software revision, revision level of the system software and date the game software was revised.

Example: **The ADDAMS FAMILY S.C.E. Sound Rev. L-1**
20017 Rev. L-6 Sy.3.12 1/28/94

Press the Enter button to enter the WPC Menu System (refer to the section entitled 'Menu System Operation' for more information). Perform the entire Test Menu routine to verify the game is operating satisfactorily. Successful completion of the tests in the Test Menu routine will show the game is ready to begin earning your investment return.

ATTRACT MODE*. After completing the Test Menu routine, press the Escape button three times to enter the Attract Mode. During the Attract Mode, playfield and backbox lamps blink. The display exhibits a series of messages informing the player concerning:

A. Recent highest scores*
B. A "custom message"
C. The score to achieve to obtain a Replay award*

These (or similar) displays reappear occasionally, accompanied by sounds and music, until a player initiates game play by inserting a coin, or when credits are available, pressing the Start button.

*Operator-adjustable feature.

CREDIT POSTING. Insert coin(s). A sound is heard for each coin. The display will show the number of credits purchased. So long as the number of maximum allowable credits* are NOT exceeded by coin purchase or high score, credits are posted correctly.

STARTING A GAME. Press the Start button once. A startup sound plays. The number of credits shown in the display decreases by one. The display flashes 00 (until the first playfield switch is actuated), and shows ball 1. Additional players may enter the game by pressing the Start button once for each player, before the end of play on the first ball.

TILTS. Actuating the Slam Tilt switch on the coin door inside the cabinet ends the current game and proceeds to the Game Over Mode. With the third closure* of the plumb bob tilt switch, the player loses the remaining play of that ball, but can complete the game.

END OF GAME. All earned scores and bonuses are awarded. If a player's final score exceeds the specified value, the player receives a designated award for achieving the current highest score. A random digit set* appears in the display. Credit* may be awarded when the last two digits of any player's score (1 through 4) match the random digits. Match, high score and game over sounds are made, as appropriate.

GAME OVER MODE. GAME OVER will show in the display. Afterward, the high scores will flash on the display. The game proceeds to the Attract Mode.

*Operator-adjustable feature.

MENU SYSTEM OPERATION

The ADDAMS FAMILY Special Collectors Edition operates on a Menu System. The Main Menu allows you to choose from several main categories, which in turn lead to other menus to choose from. To enter the Menu System, open the coin door and press the Begin Test button. The displays show the Game I.D. Mode. Press the Enter button and the Main Menu appears. To cycle through the Main Menu selections press either the Up or Down button. Activate any selection by pressing the Enter button when the desired selection appears in the displays. To return to the Attract Mode while viewing the Main Menu, or to return to a previous menu selection, press the Escape button. Press the Start button for HELP at any time.

Main Menu

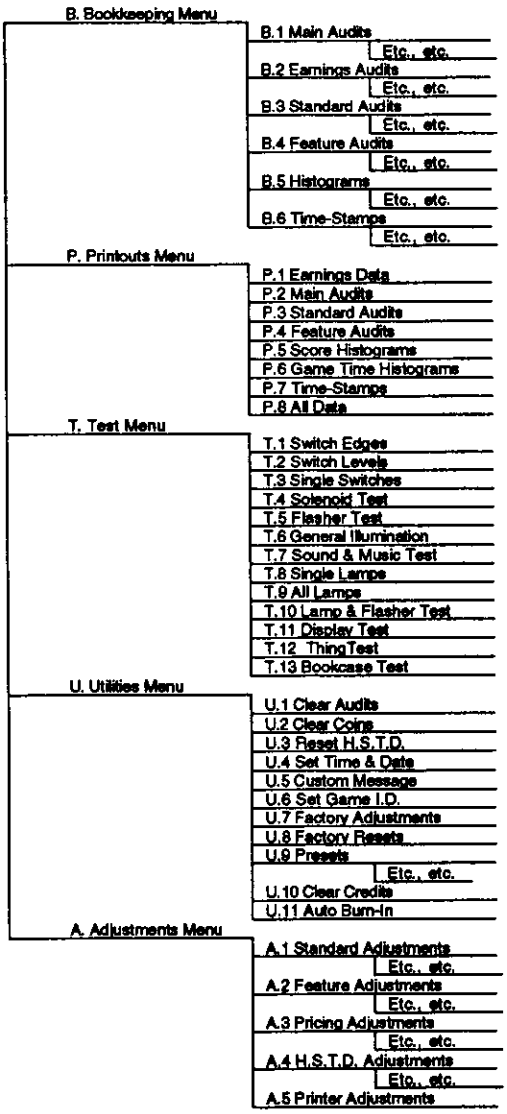

Press Escape
To move out of a menu selection.

Press Enter
To get into a menu selection.

Press Up
Increases sequence; Example A.1, A.2, A.3, A.4.

Press Down
Decreases Sequence; Example A.4, A.3, A.2, A.1.

Use Up and Down to cycle through the selections in a menu.

Use Escape and Enter to move into and out of the selected menu

MAIN MENU

B. Bookkeeping
P. Printouts (optional board required)
T. Tests
U. Utilities
A. Adjustments

Bookkeeping is the first category available from the Main Menu. Press the Enter button to activate the Bookkeeping Menu. Press the Up or Down button to cycle through the selections. Press the Enter button to activate the desired Bookkeeping group when it appears on the display.

B. BOOKKEEPING MENU

B.1 Main Audits
B.2 Earning Audits
B.3 Standard Audits
B.4 Feature Audits
B.5 Histograms
B.6 Time-Stamps

Once you have entered the desired Bookkeeping Group, press the Up or Down button to cycle through the available audits in that group. Audits cannot be set, they can only be cleared by using U1 and U2 from the Utilities Menu.

One Button Audit System
Information from the Bookkeeping Menu is obtainable directly from the Attract Mode. Continually pressing the Enter button, while in the Attract Mode, will cycle through all of the game audits.

B.1 Main Audits

B.1	01	Total Earnings	00	These audits (which also appear
B.1	02	Recent Earnings	00	in other groups) are the most
B.1	03	Free Play Percent	00	important, and are grouped
B.1	04	Average Ball Time	00	here for easier access.
B.1	05	Average Game Time	00	
B.1	06	Total Plays	00	
B.1	07	Replay Awards	00	
B.1	08	Percent Replays	00	
B.1	09	Extra Balls	00	
B.1	10	Percent Extra Ball	00	

Press the Escape button to return to the Bookkeeping Menu. Press the Up button to advance to the next desired Bookkeeping Group, (or press the Down button to return to a previous group). Press the Enter button to activate that group. Press the Up or Down button to cycle through the available audits in that group.

B.2 Earning Audits*

B.2	01	Recent Earnings	00
B.2	02	Recent Left Slot	00
B.2	03	Recent Center Slot	00
B.2	04	Recent Right Slot	00
B.2	05	Recent 4th Slot	00
B.2	06	Recent Paid Credits	00
B.2	07	Recent Service Credits	00
B.2	08	Total Earnings*	00
B.2	09	Total Left Slot*	00
B.2	10	Total Center Slot*	00
B.2	11	Total Right Slot*	00
B.2	12	Total 4th Slot*	00
B.2	13	Total Paid Credits*	00
B.2	14	Total Service Credits*	00

*NOTE: These audits are NOT resettable. They are a record of the earnings since the "CLOCK 1ST SET" Time-Stamp.

Press the Escape button to return to the Bookkeeping Menu. Press the Up button to advance to the next desired Bookkeeping Group, (or the Down button to return to a previous Bookkeeping Group). Press the Enter button to activate that group. Press the Up or Down button to cycle through the available audits in that group.

B.3 Standard Audits

B.3	01	Games Started	00
B.3	02	Total Plays•	00
B.3	03	Total Free Play	00
B.3	04	Free Play Percent	00
B.3	05	Replay Awards	00
B.3	06	Percent Replays	00
B.3	07	Special Awards	00
B.3	08	Percent Special	00
B.3	09	Match Awards	00
B.3	10	Percent Match	00
B.3	11	H.S.T.D. Credits	00
B.3	12	Percent H.S.T.D	00
B.3	13	Extra Ball	00
B.3	14	Percent Extra Ball	00
B.3	15	Tickets Awarded	00
B.3	16	Percent Tickets	00
B.3	17	Left Drains	00
B.3	18	Right Drains	00
B.3	19	Average Ball Time	00
B.3	20	Average Game Time	00
B.3	21	Minutes of Play	00
B.3	22	Minutes On	00
B.3	23	Balls Played	00
B.3	24	Tilts	00
B.3	25	Replay 1 Awards	00
B.3	26	Replay 2 Awards	00
B.3	27	Replay 3 Awards	00
B.3	28	Replay 4 Awards	00
B.3	29	1 Player Games	00
B.3	30	2 Player Games	00
B.3	31	3 Player Games	00
B.3	32	4 Player Games	00
B.3	33	H.S.T.D. Reset Count	00
B.3	34	Burn-in Cycles	00
B.3	35	1st Replay Level	00

•As a new WPC feature, the "Total Plays" counter only counts completed games. A game is considered completed when the final ball begins. Audit information from an incomplete game is ignored. Therefore operation for test and service do not affect the Audits.

Press the Escape button to return to the Bookkeeping Menu. Press the Up button to advance to the next desired Bookkeeping Group, (or press the Down button to return to a previous group). Press the Enter button to activate that group. Press the Up or Down button to cycle through the available audits in that group.

B.4 Feature Audits

B.4	01	Games In Which Bookcase Was Opened	00
B.4	02	Multiball	00
B.4	03	2nd Multiball	00
B.4	04	3rd Multiball	00
B.4	05	Rematch Made	00
B.4	06	Train Jackpot	00
B.4	07	Ramp Jackpot	00
B.4	08	Double Jackpots	00
B.4	09	Triple Jackpots	00
B.4	10	Quick Multiball	00
B.4	11	Vault Millions	00
B.4	12	Hurry-Up (Thing Lock) Multiball	00
B.4	13	Thing Vault	00
B.4	14	Mansion Awards	00
B.4	15	Mansion Extra Ball	00
B.4	16	Tour The Mansion	00
B.4	17	Ramp Extra Ball Lit	00
B.4	18	Train Wreck Extra Ball Lit	00
B.4	19	Train Target	00
B.4	20	Train Wrecks	00
B.4	21	Swamp 1X	00
B.4	22	Swamp 5X	00
B.4	23	Skill Shots	00
B.4	24	Center Ramp	00
B.4	25	Side Ramp	00
B.4	26	Center Kickout	00
B.4	27	Right Kickout	00
B.4	28	Thing Trips	00
B.4	29	Thing Awards	00
B.4	30	Thing Flips	00
B.4	31	Thing Flips Hits	00
B.4	32	Mansion Spots	00
B.4	36	It Items Found	00
B.4	37	Buy-in Extra Balls	00

Press the Escape button to return to the Bookkeeping Menu. Press the Up button to the advance to the next desired Bookkeeping Group, (or press the Down button to return to a previous Bookkeeping Group). Press the Enter button to activate that group. Press the Up or Down button to cycle through the available audits in that group.

B.5 Histograms

B.5	01	0.0-0.5 Million Scores	00%	00
B.5	02	0.5-0.9 Million Scores	00%	00
B.5	03	1.0-1.5 Million Scores	00%	00
B.5	04	1.5-1.9 Million Scores	00%	00
B.5	05	2.0-2.9 Million Scores	00%	00
B.5	06	3.0-3.9 Million Scores	00%	00
B.5	07	4.0-4.9 Million Scores	00%	00
B.5	08	5.0-5.9 Million Scores	00%	00
B.5	09	6.0-7.9 Million Scores	00%	00
B.5	10	8.0-9.9 Million Scores	00%	00
B.5	11	10-15 Million Scores	00%	00
B.5	12	15-20 Million Scores	00%	00
B.5	13	Over 20 Million	00%	00
B.5	14	Game Time 0.0-1.0 Mins	00%	00
B.5	15	Game Time 1.0-1.5 Mins	00%	00
B.5	16	Game Time 1.5-2.0 Mins	00%	00
B.5	17	Game Time 2.0-2.5 Mins	00%	00
B.5	18	Game Time 2.5-3.0 Mins	00%	00
B.5	19	Game Time 3.0-3.5 Mins	00%	00
B.5	20	Game Time 3.5-4.0 Mins	00%	00
B.5	21	Game Time 4-5 Mins	00%	00
B.5	22	Game Time 5-6 Mins	00%	00
B.5	23	Game Time 6-8 Mins	00%	00
B.5	24	Game Time 8-10 Mins	00%	00
B.5	25	Game Time 10-15 Mins	00%	00
B.5	26	Game Time Over 15 Mins	00%	00

Press the Escape button to return to the Bookkeeping Menu. Press the Up button to the advance to the next desired Bookkeeping Group, (or press the Down button to return to a previous Bookkeeping Group). Press the Enter button to activate that group. Press the Up or Down button to cycle through the available audits in that group.

B.6 Time-Stamps

The Time-Stamps Menu allows you to view dates and times that are important to game software.

B.6	01	Current Time
B.6	02	Clock 1st Set
B.6	03	Clock Last Set
B.6	04	Audits Cleared
B.6	05	Coins Cleared
B.6	06	Factory Setting
B.6	07	Last Game Start
B.6	08	Last Replay
B.6	09	Last H.S.T.D. Reset
B.6	10	Champion Reset
B.6	11	Last Printout
B.6	12	Last Service Credit

Press the Escape button to return to the Bookkeeping Menu. Then, either press the Up or Down button to return to a previous Bookkeeping Menu Group, or press the Escape button again to return to the Main Menu. Once in the Main Menu either press the Up button to advance to the next menu selection, the Printouts Menu, or press the Down button to return to a previous Main Menu selection.

Press the Enter button to activate the Printouts Menu, once the menu name is shown under the Main Menu. Then, use the Up or Down button to cycle through the Printouts Menu selections. Press the Enter button to activate the desired Printouts Group when that group appears in the displays.

P. PRINTOUTS MENU
(optional board required)

P.1 Earnings Data
P.2 Main Audits
P.3 Standard Audits
P.4 Feature Audits
P.5 Score Histograms
P.6 Time Histograms
P.7 Time-Stamps
P.8 All Data

The Printouts Menu is a combination of the other menus. This menu allows you to access and print information in the available menu selections.

If no Printer is attached the the message "Waiting for Printer" appears in the displays. Note: Set the print specification from the Adjustment Menu, A.5 Printer Adjustments.

Press the Escape button to return to the Printouts Menu. Then, either press the Up or Down button to return to a previous Printouts Menu Group, or press the Escape button again to return to the Main Menu. Once in the Main Menu press the Up button to advance to the next menu selection, the Test Menu, or press the Down button to return to a previous Main Menu selection.

Use the Service Switch Actuator to hold in the top interlock switch located in the bottom left corner of the coin door opening. The actuator must be in place in order to activate the solenoids and flashlamps.

Press the Enter button to activate the Test Menu, once the menu name is shown under the Main Menu. Then, use the Up or Down button to cycle through the Test Menu selections. Press the Enter button to activate the desired test when that test appears in the displays.

T. TEST MENU

T.1 Switch Edges
T.2 Switch Levels
T.3 Single Switch
T.4 Solenoid Test
T.5 Flasher Test
T.6 General Illumination
T.7 Sound & Music Test
T.8 Single Lamps
T.9 All Lamps
T.10 Lamp & Flasher Tests
T.11 Display Test
T.12 Thing Test
T.13 Bookcase Test

T.1 Switch Edges

For all switches, the number on the left indicates the column, the number on the right indicates the row. Example-Switch 23 means 2nd column, 3rd row.

To test the Left and Right Flippers, press the Left or Right Flipper buttons during switch test. The flipper name and switch number should show in the displays. Any other results indicate the system has detected a problem with the flipper circuit.

To activate the Switch Edges Test, from the Test Menu, press the Enter button. The name and number of each switch that is pressed is shown in the displays. If any other switch, or no switch at all is indicated, the system has detected a problem with the switch circuit.

Press Escape to return to the Test Menu. Press the Up button to display the next test, (or the Down button to return to a previous test). Press the Enter button to activate that test.

T.2 Switch Levels

Once the test name is shown under the Test Menu, press the Enter button. The name and number of each switch that is activated is shown in the displays. This test automatically cycles through all switches that are detected closed. Current switch is indicated by a filled square.

Press the Escape button to return to the Test Menu. Press the Up button to display the next test, (or the Down button to return to a previous test). Press the Enter button to activate that test.

T.3 Single Switches

Once the test name is shown under the Test Menu, press the Enter button. The Single Switch Test isolates a particular switch by blocking signals from all other switches. Use the Up or Down buttons to select the switch to be tested. During the Single Switch Test, a flashing cross indicates your location in the matrix, a square indicates a closed switch, and a dot indicates an open switch. Press the Start button to obtain wire color, connector, and fuse information of any switch when that switch is displayed.

Press the Escape button to return to the Test Menu. Press the Up button to display the next test, (or the Down button to return to a previous test). Press the Enter button to activate that test.

T.4 Solenoid Test

Once the test name is shown under the Test Menu, press the Enter button. The Solenoid Test has three modes, Repeat, Stop, and Running. Only one solenoid should turn On at a time. The system has detected a problem if, more then one solenoid turns On, a solenoid comes On and stays On, or no solenoid turns On during the Repeat or Running test modes. Press the Start button to see the wire color, driver number, connector and, fuse information of any coil, when that coil is displayed.

Repeat - This test allows you to stop and pulse a single coil or flashlamp. Once you have entered the Solenoid Test, coil 1 shows in the displays and the corresponding solenoid activates. Press the Up or Down button to cycle through the solenoids, one at a time, manually. The same solenoid pulses until you press the Up or Down button to move to the next one. Either press the Escape button to return to the Test Menu, or press the Enter button to move to the next test mode.

Stop - This test allows you to stop the Solenoid Test at any point. Press Enter during the Repeat test mode and the Solenoid Test stops. There should not be any solenoids activated while the test is stopped. Either press the Escape button to return to the Test Menu, or the Enter button to move to the next test mode.

Running - This test allows you to cycle through the solenoids automatically. Press the Enter button during the Stop test mode. The displays show you the name and number of the solenoid currently being pulsed.

Either press the Enter button to return to the Repeat test mode, or press the Escape button to return to the Test Menu. Once in the Test Menu press, the Up button to display the next test, (or the Down button to return to a previous test). Press the Enter button to activate that test.

T.5 Flasher Test

Once the test name is shown under the Test Menu, press the Enter button. This test allows you to test the flashlamp part of the solenoid circuit exclusively. This test, like the Solenoid Test, has three test modes Repeat, Stop, and Running. During this test, only one flashlamp circuit should turn On at a time. If, more then one flashlamp circuit turns On, or stays On, or no flashlamp circuit turns On at all during the Repeat or Running test modes the system has detected a problem. Press the Start button to see the wire color, driver number, connector, and fuse information of any flashlamp circuit when that circuit appears in the displays.

Repeat - This test allows you to stop and pulse a single flashlamp. Once you have entered the Flasher Test the name and number of the first flashlamp circuit shows in the displays and the corresponding bulb(s) flashes. Press the Up or Down button to cycle through all of the flashlamps circuits one at a time, manually. The same flashlamp circuit pulses until you press the Up or Down button to move to the next one. Either, press the Escape button to return to the Test Menu, or press the Enter button to advance to the next test mode.

Stop - This test allow you to stop the Flasher Test at any time. Press the Enter button during the Repeat test mode. The Flasher Test stops. There should not be any flashlamp circuit turned On during this test mode. Either press the Escape button to return to the Test Menu, or press the Enter button to advance to the next test mode.

Running - This test allows you to cycle through the flashlamps automatically. Press the Enter button during the Stop test mode. The displays show you the name and number of the flashlamp currently being pulsed, and the corresponding bulb(s) flashes.

Either press the Enter button to return to the Repeat test mode or, press the Escape button to return to the Test Menu. Once in the Test Menu, press the Up button to display the next test, (or the Down button to return to a previous test). Press the Enter button to activate that test.

T.6 General Illumination

Once the test name is shown under the Test Menu, press the Enter button. This test allows you to check all of the General Illumination circuits. There are two modes of operation, Stop and Run. To obtain wire color, driver number, connector, and fuse information, press the Start button when the desired General Illumination circuit appears in the displays.

Stop - Press the Up or Down buttons to cycle through the General Illumination Test manually. All illumination is tested first, followed by an individual circuit test. The circuit name and number shows in the displays while the corresponding lamps lights. If any other results occur the system has detected an error.

Run - Press the Enter button any time during Stop test mode and the General Illumination Test cycles through automatically. For each circuit shown in the displays the corresponding bulbs should light. If any other results occurs the system has detected a problem.

Either press the Enter button to return to Stop test mode, or the Escape button to return to the Test Menu. Once in the Test Menu press the Up button to advance to the next test, (or the Down button to return to a previous test). Press the Enter button to activate that test.

T.7 Sound and Music Test

Once the test name is shown under the Test Menu, press the Enter button. The Sound and Music Test allows you to check the audio circuits. This test has three modes for testing the sound and music circuits, Running, Repeat and Stop.

Running - This test steps through a sequence of sounds and music. Pressing the Up or Down button during this portion of the Sound and Music test allows you to advance to a particular sound or tune without having to wait for the program to play all the sounds available in the test. For each name and number that appears in the displays a sound or tune should be heard. Any other results indicates the system has detected a problem.

Repeat - Press the Enter button at any time during the Running test mode to cause the program to stop and repeat a particular sound or tune. The same sound should repeat continuously until the Up or Down button is pressed. Any other results indicates the system has detected a problem.

Stop - Press the Enter button at any time during the Repeat test mode to stop this test altogether. Nothing should be heard. Any other results indicates the system has detected a problem.

Use the Enter button to return to the Running test mode, or the Escape button to return to the Test Menu. Once in the Test Menu press the Up button to display the next test, (or the Down button to return to a previous test) . Press the Enter button to activate that test.

T.8 Single Lamp Test

For all lamps, the number on the left indicates the column, the number on the right indicates the row. Example- Lamp 23 means 2nd column, 3rd row.

Once the test name is shown under the Test Menu, press the Enter button. This test allows you to test each lamp circuit individually. Press the Up or Down button to cycle through this test. For each name and number that is shown in the displays the corresponding lamp should light. Any other results indicates the system has detected a problem. Press the Start button to obtain wire color, connector, and fuse information when the desired lamp is lit.

Press the Escape button to return to the Test Menu. Press the Up button to display the next test, (or the Down button to return to a previous test). Press the Enter button to activate that test.

T.9 All Lamps Test

Once the test name is shown under the Test Menu, press the Enter button. This test causes all the controlled lamps to flash at the same time. Every controlled lamp should flash. Any other results indicates the system has detected a problem.

Press the Escape button to return to the Test Menu. Press the Up button to display the next test, (or the Down button to return to a previous test). Press the Enter button to activate that test.

T.10 Lamp and Flasher Test

Once the test name is shown under the Test Menu, press the Enter button. This test causes all the flashlamps and the controlled lamps to flash at the same time. The controlled lamps blink, while the flashlamps cycle from highest to lowest. Any other results indicates the system has detected a problem.

Press the Escape button to return to the Test Menu. Press the Up button to display the next test, (or the Down button to return to a previous test). Press the Enter button to activate that test.

T.11 Display Test

Once the test name is shown under the Test Menu, press the Enter button. This Test automatically turns On and Off every dot in the Dot Matrix Display. A series of patterns appear in sequence. It starts with one line, turned On, moving across the screen vertically, then horizontally. The screen inverses and one line, turned Off, moves across the screen vertically, then horizontally. The second pattern is a series of lines, turned On, moving across the screen diagonally. The screen inverses and there is a series of lines, turned Off, moving across the screen diagonally. The third pattern is gridlines turned On, then turned Off. The last pattern is a box forming an outline of dots around the matrix that are turned On. After the box outline the test repeats itself.

Press the Escape button to return to the Test Menu. Then, either press the Up or Down button to return to a previous Test, or press the Escape button again to return to the Main Menu. Once in the Main Menu, press the Up button to move to the next menu selection, the Utilities Menu, or press the Down button to return to a previous Main Menu selection.

T.12 Thing Test

Select T.12 from the Test Menu and press "Enter" to enter the "Thing" Test. Using the Up and Down buttons, 2 different test can be run:

T.12 01 Motor Test

This allows the operator to start and stop the motor that operates the "Thing Hand". Pressing "Enter" will alternately start and stop the motor. The status of the opto limit switches is shown on the bottom line of the display.

T.12 02 Operation Test

This allows the operator to do a normal operation of the hand mechanism. Each time "Enter" is pressed, a cycle will begin which will operate the mechanism as is don during game play. If a ball is placed in the eject hole, the hand should take the ball and drop it into its box where it will then be returned to the playfield. During the operation of this test, the status of the opto limit switches is shown on the bottom line of the display.

T.13 Bookcase Test

This allows you to start and stop the motor that operates the Bookcase. Pressing "Enter" will alternately start and stop the motor. The status of the bookcase limit switches is shown on the bottom line of the display.

Press the Enter button to activate the Utilities Menu, once the menu name is shown under the Main Menu. Then, use the Up or Down button to cycle through the Utility Menu selections. Press the Enter button to activate the desired Utility or Utility Group when it appears in the displays. If you change a utility setting and realize you have made a mistake, press the Escape button while "Saving Adjustment Value" is still in the displays. The original setting is retained and the new setting is ignored.

U. UTILITIES MENU

U.1 Clear Audits
U.2 Clear Coins
U.3 Reset H.S.T.D.
U.4 Set Time & Date
U.5 Custom Message
U.6 Set Game I.D.
U.7 Factory Adjustments
U.8 Factory Resets
U.9 Presets
U.10 Clear Credits
U.11 Auto Burn-in

U.1 Clear Audits

Press the Enter button to clear the Standard Audits, Feature Audits, and Histograms.Press the Up button to display the next utility.

U.2 Clear Coins

Press the Enter button to clear the Earnings Audits. Press the Up button to display the next utility.

U.3 Reset H.S.T.D.

Press the Enter button to clear the High Score to Date Table and the Grand Champion. Press the Up button to display the next utility.

U.4 Set Time and Date

Press the Enter button to activate the time and date. Use the Up or Down button to change the value, then press the Enter button to lock in that value. If you make a mistake press the Escape button while "Saving Adjustment Value" is displayed. Press the Up button to move to the next utility.

U.5 Custom Message

Set A.1 20 to YES before writing a Custom Message. Press the Enter button to begin entry of the custom message that appears in the displays during the Attract Mode. Use the Up or Down button to rotate letters. Use the Start button to rotate punctuation marks, (if desired). Press the Enter button to lock in the desired letter and punctuation. If you make a mistake, use Up and Down to select the "back-arrow" character located before the space character and after the number nine. Press Enter while the back-arrow shows to erase the previously entered character. Once your message is complete, press and hold the Enter button until "Message Stored" is displayed.

Press the Escape button to cancel the new message. The message "Press Enter to Reset" appears. If you press Enter, the custom message is cleared and no message is displayed. If you press Escape, the original message remains intact.

U.6 Set Game I.D.
This utility allows the operator to install a message, such as game location, that only appears on printouts . Press the Enter button to activate Set Game I.D.. Use the Up or Down button to rotate letters. Use the Start button to rotate punctuation marks, (if desired). Press the Enter button to lock in the desired letter and punctuation.

U.7 Factory Adjustment
Press the Enter button to restore the adjustments to factory settings, then press the Up button to display the next utility.

U.8 Factory Reset
Press the Enter button to restore the adjustments to their factory setting, clear the Audits, H.S.T.D Table, and Custom Message/Game I.D. Press the Up button to display the next utility.

U.9 Presets
Press the Enter button to activate the Presets Group. Use the Up or Down buttons to cycle through the available Presets. When the desired Preset is displayed, press the Enter button to lock in that Preset. If you realize you have made a mistake, press the Escape button while "Saving Adjustment Value" is displayed. The new value is ignored and the original value is retained.

U.9 01 Install Extra Easy
The operator can change the game play difficulty adjustments to a combination that is MUCH LESS difficult than the Factory Settings. The Game Difficulty Setting Table lists the adjustments and the settings that comprise the 'Extra Easy' Group.

U.9 02 Install Easy
The operator can change the game play difficulty adjustments to a combination that is somewhat LESS difficult than the Factory Settings. The Game Difficulty Setting Table lists the adjustments and the settings that comprise the 'Easy' Group.

U.9 03 Install Medium
The operator can change the game play difficulty adjustments to a combination that is about the SAME difficulty as the Factory Settings. The Game Difficulty Setting Table lists the adjustments and settings that comprise the 'Medium' Group.

U.9 04 Install Hard
The operator can change the game play difficulty adjustments to a combination that is somewhat MORE difficult than Factory Settings. The Game Difficulty Setting Table lists the adjustments and settings that comprise the 'Hard' Group.

U.9 05 Install Extra Hard
The operator can change the game play difficulty adjustments to a combination that is MUCH MORE difficult than Factory Settings. The Game Difficulty Setting Table lists the adjustments and settings that comprise the 'Extra Hard' Group.

Game Difficulty Setting Table for U.S./Canadian/French Games

Adj. No.	Adjustment Description	Extra Easy U.9 01	Easy U.9 02	Medium U.9 03	Hard U.0 04	Extra Hard U.9 05
A.2 01	Extra Ball Percent	35	30	25	20	15
A.2 02	Bear Kick Extra Ball 1	06	06	08	08	10
A.2 04	Train Wreck Extra Ball	03	03	04	04	04
A.2 06	House Extra Ball Memory	Yes	Yes	Yes	No	No
A.2 09	Last Swamp Lock	02	01	01	01	00
A.2 10	Last Chair Release	02	02	02	01	00
A.2 12	Million Plus Memory	Yes	No	No	No	No
A.2 15	House From Swamp	Yes	Yes	Yes	Yes	No
A.2 16	Free Thing Lamps	04	03	03	02	01
A.2 18	Train Wreck Hits	02	02	02	03	03
A.2 23	Quick Multiball Memory	Yes	Yes	Yes	No	No

Game Difficulty Setting Table for German/European Games

Adj. No.	Adjustment Description	Extra Easy U.9 01	Easy U.9 02	Medium U.9 03	Hard U.0 04	Extra Hard U.9 05
A.2 01	Extra Ball Percent	35	30	25	20	15
A.2 02	Bear Kick Extra Ball 1	06	06	08	08	10
A.2 04	Train Wreck Extra Ball	03	03	04	04	04
A.2 06	House Extra Ball Memory	Yes	Yes	Yes	No	No
A.2 09	Last Swamp Lock	02	01	01	01	00
A.2 10	Last Chair Release	02	02	02	01	00
A.2 12	Million Plus Memory	Yes	No	No	No	No
A.2 15	House From Swamp	Yes	Yes	Yes	Yes	No
A.2 16	Free Thing Lamps	04	03	03	02	01
A.2 18	Train Wreck Hits	02	02	02	03	03
A.2 23	Quick Multiball Memory	Yes	Yes	Yes	No	No

U.9 06 Install 5 Ball

The operator can change the game to 5 ball play, including the changing of certain features to the recommended 5-ball level. The Preset Game Adjustments Table for U.S./Canadian Games lists the adjustments and settings that comprise the 'Install 5 Ball' Group.

U.9 07 Install 3 Ball

The operator can change the game to 3 ball play, including the changing of certain features to the recommended 3-ball level. The Preset Game Adjustments Table for U.S./Canadian Games lists the adjustments and settings that comprise the 'Install 3 Ball' Group.

Preset Game Adjustments Table for U.S./Canadian Games

Adjustment Number	Adjustment Description	Install 5 Ball U.9 06	Install 3 Ball U.9 07
A.1 01	Balls Per Game	3	5
A.2 01	Extra Ball Percent	25	25
A.2 02	Bear Kick Extra Ball 1	08	12
A.2 04	Train Wreck Extra Ball	04	4
A.2 06	House Extra Ball Memory	Yes	Yes
A.2 09	Last Swamp Lock	01	00
A.2 10	Last Chair Release	02	01
A.2 12	Million Plus Memory	No	No
A.2 15	House From Swamp	Yes	No
A.2 16	Free Thing Lamps	03	02
A.2 18	Train Wreck Hits	02	03
A.2 23	Quick Multiball Memory	Yes	No

U.9 08 Install Add-A-Ball

The operator utilizes this option to delete all Free Play awards and replace them with Extra Ball awards. Individual adjustments are affected, as follows:

Adj.	Name	New Setting
A.1 13	Replay Boost	Off
A.1 14	Replay Award	Extra Ball
A.1 15	Special Award	Extra Ball
A.1 17	Extra Ball Ticket	No
A.1 19	Match Feature	Off
A.4 04	Champion Credits	00
A.4 05	High Score 1 Credits	00
A.4 06	High Score 2 Credits	00
A.4 08	High Score 3 Credits	00
A.4 07	High Score 4 Credits	00

U.9 09 Install Ticket

The operator utilizes this option to delete Credit awards and replace them with Ticket awards. Individual adjustments are affected as follows.

Adj.	Name	New Settings
A.1 14	Replay Award	Ticket
A.1 15	Special Award	Ticket
A.1 16	Match Award	Ticket
A.1 17	Extra Ball Ticket	Yes
A.1 31	Ticket Expansion Board	Yes
A.4 02	H.S.T.D. Award	Ticket

U.9 10 Install Novelty

The operator utilizes this option to removes all Free Play and Extra Ball awards. Individual adjustments are affected as follows:

Adj.	Name	New Setting
A.1 04	Max. Extra Ball	Off
A.1 05	Replay System	Fixed
A.1 09	Replay Level 1	Off
A.1 10	Replay Level 2	Off
A.1 11	Replay Level 3	Off
A.1 12	Replay Level 4	Off
A.1 15	Special Award	Points
A.1 19	Match Feature	Off
A.4 01	Highest Score	On
A.4 04	Champion Credits	00
A.4 05	High Score 1 Credits	00
A.4 06	High Score 2 Credits	00
A.4 07	High Score 3 Credits	00
A.4 08	High Score 4 Credits	00

U.9 11 Install Buy-In

The operator uses this option to automatically set game pricing to 1 for 50¢/2 for $1.00 and 1 Coin Buy-in (A.3 19) to YES. **Note that this is not the same feature that allows the player to buy an extra ball at the end of the game. See A.2 30 "Buy Extra Ball".**

U.9 17 Install German 1•

The operator uses this adjustment to modify the game pricing and the type of game play. The Preset Game Adjustments Table for German/European Games lists the adjustments and settings that comprise the 'Install German 1' Group.

U.9 18 Install German 2•

The operator uses this adjustment to modify the game pricing and the type of game play. The Preset Game Adjustment Table for German/ European Games lists the adjustments and settings that comprise the 'Install German 2' Group.

U.9 19 Install German 3•

The operator uses this adjustment to modify the game pricing and the type of game play. The Preset Game Adjustments Table for German/European Games lists the adjustments and settings that comprise the 'Install German 3' Group.

U.9 20 Install German 4•

The operator uses this adjustment to modify the game pricing and the type of game play. The Preset Game Adjustments Table for German/European Games lists the adjustments and settings that comprise the 'Install German 4' Group

U.9 21 Install German 5•

The operator uses this adjustment to modify the game pricing and the type of game play. The Preset Game Adjustments Table for German/European Games lists the adjustments and settings that comprise the 'Install German 5' Group.

U.9 22 Install German 6•

The operator uses this adjustment to modify the game pricing and the type of game play. The Preset Game Adjustments Table for German/European Games lists the adjustments and settings that comprise the 'Install German 6' Group.

• For German Jumpered CPU Boards only.

Preset Game Adjustments Table for German/European Games

Adj. #	Adj. Description	German 1 U.9 17	German 2 U.9 18	German 3 U.9 19	German 4 U.9 20	German 5 U.9 21	German 6 U.9 22
A.1 14	Replay Award	Credit	Ticket	Audit	Credit	Ticket	Audit
A.1 15	Special Award	Credit	Extra Ball	Points	Credit	Extra Ball	Points
A.1 15	Match Award	Credit	Ticket	Credit	Credit	Ticket	Credit
A.1 19	Match Feature	7%	7%	Off	7%	7%	Off
A.3 01	Game Pricing	6 spiele/5 DM	6 spiele/5 DM	6 spiele/5 DM	7 spiele/5 DM	7 spiele/5 DM	7 spiele/5 DM
A.4 02	H.S.T.D. Award	Credit	Ticket	Credit	Credit	Ticket	Credit
A.4 04	Champion Credits	03	03	00	03	03	00
A.4 05	High Score 1 Credits	01	01	00	01	01	00
A.4 06	High Score 2 Credits	00	00	00	00	00	00
A.4 07	High Score 3 Credits	00	00	00	00	00	00
A.4 08	High Score 4 Credits	00	00	00	00	00	00
A.4 10	Backup Champion	15,000,000	15,000,000	00	15,000,000	15,000,000	00
A.4 11	Backup High Score 1	12,000,000	12,000,000	00	12,000,000	12,000,000	00
A.4 12	Backup High Score 2	11,000,000	11,000,000	00	11,000,000	11,000,000	00
A.4 13	Backup High Score 3	10,000,000	10,000,000	00	10,000,000	10,000,000	00
A.4 14	Backup High Score 4	9,000,000	9,000,000	00	9,000,000	9,000,000	00

U.9 23 Install French 1*
The operator uses this adjustment to modify the game pricing and the type of play. The Preset Game Adjustments Table for French Games lists the adjustments and setting that comprise the 'Install French 1' Group.

U.9 24 Install French 2*
The operator uses this adjustment to modify the game pricing and the type of game play. The Preset Game Adjustments Table for French Games list the adjustments and settings that comprise the 'Install French 2' Group.

U.9 25 Install French 3*
The operator uses this adjustment to modify the game pricing and the type of game play. The Preset Game Adjustments Table for French Games list the adjustments and settings that comprise the 'Install French 3' Group.

U.9 26 Install French 4*
The operator uses this adjustment to modify the game pricing and the type of game play. The Preset Game Adjustments Table for French Games lists the adjustments and setting that comprise the 'Install French 4' Group.

U.9 27 Install French 5*
The operator uses this adjustment to modify the game pricing and the type of game play. The Preset Game Adjustments Table for French Games lists the adjustments and settings that comprise the 'Install French 5' Group.

U.9 28 Install French 6*
The operator uses this adjustment to modify the game pricing and the type of game play. The Preset Game Adjustments Table for French Games lists the adjustments and settings that comprise the 'Install French 6' Group.

***For French Jumpered CPU Boards only.**

Preset Game Adjustments Table for French Games

Adj. #	Adjustment Description	French 1 U.9 23	French 2 U.9 24	French 3 U.9 25	French 4 U.9 26	French 5 U.9 27	French 6 U.9 28
U.9 06	Install 5 Ball	N/A	N/A	N/A	N/A	N/A	Yes

Press the Escape button to return to the Presets menu. Then press the Up button to display the next utility, (or the Down button to return to a previous utility).

U.10 Clear Credits

Press the Enter button to clear the game Credits. Press the Up button to display the next utility.

U.11 Auto Burn-in

Press the Enter button to activate Auto Burn-in. This utility allows you to automatically cycle through several tests. This helps in finding intermittent problems. The tests that Auto Burn-in cycles through are the Display Test, the Sound and Music Test, the All Lamps Test, the Solenoid Test, the Flashers Test, and the General Illumination Test.

U.12 New Location

This function is used to alert the "Thing Flips" calibration system that the game has been moved to a new location. Select Function U.12. Press Enter. The game will confirm that you have re-started calibration of the "Thing Flips" system.

Press the Escape button to return to the Utilities Menu. Then, either press the Up or Down button to return to a previous Utilities Menu Group, or press the Escape button again to return to the Main Menu. Once in the Main Menu either use the Up or Down buttons to return to a previous menu selection, or press the Escape button again to return to the Attract Mode.

Press the Enter button to activate the Adjustments Menu. Press the Up or Down button to cycle through the Adjustment Menu selections. Press the Enter button to activate the desired Adjustment group when it appears on the display.

A. ADJUSTMENTS MENU

A.1 Standard Adjustments
A.2 Feature Adjustments
A.3 Pricing Adjustments
A.4 H.S.T.D Adjustments
A.5 Printer Adjustments (optional board required)

Once you have entered the adjustment group desired, press the Up or Down button to cycle through the available adjustments in that group. When the desired adjustment appears press the Enter button to activate that adjustment. When an adjustment is activated, the setting value begins to flash. Use the Up or Down button to raise or lower the setting value. When the desired value is displayed press Enter to lock in the value. If you realize you have made an error, press the Escape button while "Saving Adjustment Value" is displayed. The new value is ignored and the original value is retained.

A.1 Standard Adjustments

A.1 01 Balls Per Game
The operator defines a "game" by specifying the number of balls to be played. The range of this setting is 1 through 10.

A.1 02 Tilt Warnings
The operator specifies the number of total actuations of the plumb bob mechanism that can occur before the game is "tilted". The range of this setting is 1 through 10.

A.1 03 Maximum Extra Balls
The operator chooses the number of Extra Balls that a player may accumulate. The range of this setting is 1 through 10, or "No Extra Ball" (Extra Ball disabled).

A.1 04 Maximum Extra Balls/Ball in Play
The operator chooses the number of Extra Balls to be awarded per ball in play. The range of this setting is:

OFF - No maximum number of Extra Balls per ball in play.
1-10 - 1 through 10 Extra Balls per ball in play.

A.1 05 Replay System
The operator chooses the replay system to be used. The choices are:

Fixed - Replay value is set by the operator and does not change during game play.
Auto% - Replay starting value is set by the operator and changes every 50 games to comply with the percentage of replays desired.

A.1 06 Replay Percent*
The operator chooses the percentage of replays the players are able to earn when Auto Replay is used. The range of this setting is 5% to 50%.

A.1 07 Replay Start*
The operator chooses the replay starting value when Auto% Replay is used. The range of this setting is 1, 000, 000 to 20, 000, 000.

A.1 08 Replay Levels*
The operator chooses the number of replay levels used by the Auto% Replay mode. The range of this setting is 1 through 4. When the operator chooses two replay levels, the second replay level is automatically adjusted to twice the starting replay level value. When three of four replay levels are chosen, their values are automatically adjusted to three or four times the starting replay level value.

*For Auto % Replay.

A.1 09 Replay Level 1**
The operator chooses the value to be used for the first Fixed Replay. The range of this setting is 00 to 25, 000, 000.

A.1 10 Replay Level 2**
The operator chooses the value to be used for the second Fixed Replay. The range of this setting is 00 to 25, 000, 000.

A.1 11 Replay Level 3**
The operator chooses the value to be used for the third Fixed Replay. The range of this setting is 00 to 25, 000, 000.

A.1 12 Replay Level 4**
The operator chooses the value to be used for the fourth Fixed Replay. The range of this setting is 00 to 25, 000, 000.

** For Fixed Replay

A.1 13 Replay Boost

The operator chooses if the replay score can be temporarily boosted by the selected amount EACH time the player reaches or exceeds the replay score. This temporary boost is canceled when Credits=0, when the player inserts another coin, or when Begin Test is pressed. The choices are:

ON-Score is boosted between 500, 000 and 5, 000, 000 points.
OFF-The replay score is not boosted.

A.1 14 Replay Award

For either Auto% Replay or Fixed Replay the operator can choose the form of the award automatically provided when the player exceeds any replay level. The choices are:

Credit	-	Reaching each Replay level awards credit.
Ticket	-	Reaching each Replay level awards a ticket.
Ball	-	Reaching each Replay level awards an Extra Ball.
Audit	-	Reaching each Replay level awards nothing to the player; it does increase the entry value of the Audit Item(s) maintaining a tally of these awards.

A.1 15 Special Award

The operator can choose the award automatically provided when the player scores a special. The choices are:

Credit	-	Scoring a Special awards a Credit.
Ticket	-	Scoring a Special awards a Ticket.
Ball	-	Scoring a Special awards an Extra Ball.
Points		-Scoring a Special awards 1 Million points.

A.1 16 Match Award

The operator can choose the award automatically provided when the players wins a match. The choices are:

Credit	-	Winning a Match awards a Credit.
Ticket	-	Winning a Match awards a Ticket.

A.1 17 Extra Ball Ticket

The operator can choose whether a Ticket is awarded when the player earns an Extra Ball. The choices are:

YES	-	The player is awarded a Ticket in addition to an Extra Ball.
NO	-	The player is not awarded a Ticket.

A.1 18 Maximum Ticket/Player

The operator can choose the amount of Tickets each player can earn. The range of this setting is 00 to 100.

A.1 19 Match Feature

The operator can choose the desired percentage for the Match Feature occurring at the end of the game. The range of this setting is:

OFF - Match Feature is not available.
1 -50% - 1% is 'hard'; 50% is 'extremely easy'. During the Match Feature the game selects a random two-digit number at the end of the game and compares each players score for an identical two digits in the rightmost two positions. A matching of these two digits results in an award of a Credit or a Ticket.

A.1 20 Custom Message

The operator chooses if a message is displayed during the Attract Mode. The choices are:

YES - A message is displayed
NO - A message is not displayed.

A.1 21 Language

The operator chooses what language the game uses. The choices are, English, French, or German.

A.1 22 Clock Style

The operator chooses what style of clock the game uses. The choices are A.M./P.M. or 24 Hours.

A.1 23 Date Style

The operator chooses what style of date the game uses. The choices are Month/Date/Year, or Date/Month/Year.

A.1 24 Show Date and Time

The operator chooses whether the date and time show in the Attract Mode. The choices are:

YES - Show the date, time in status report or in the Attract Mode.
NO - Do Not show date, time in status report or in the Attract Mode.

A.1 25 Allow Dim Illumination

The operator chooses whether to allow the game program to dim the General Illumination for special effects and during the Attract Mode. The choices are:

YES - Dim the General Illumination during the Attract Mode.
NO - Do Not dim the General Illumination.

A.1 26 Tournament Play

The operator chooses whether to equalize Multi-ball and Jackpots during multi-player games, (do not carry over to next player). The choices are:

YES - Keep Multi-ball and Jackpots equal.
NO - Do Not Keep Multi-ball and Jackpots equal.

A.1 27 Euro. Scr. Format

The operator chooses whether to have commas or dots between digits when numbers are displayed. The choices are:

YES - Dots instead of commas, (example- 1.000.000).
NO - Commas instead of dots, (example- 1, 000, 000).

A.1 28 Minimum Volume Control

The operator chooses whether the volume can be turned Off. The choices are:

YES - Volume can be turned Off.
NO - Volume can be turned Down but not Off.

A.1 29 General Illumination Power Saver

This adjustment allows the general illumination and controlled lamps to be dimmed following a time interval after a game is played. Power Saver Level (A.1 30) determines how dim the lamps will get. The use of this feature will substantially increase the life of the lamps.

Settings: Off 2-60 Minutes

A.1 30 Power Saver Level

When General Illumination Power Saver (A.1 29) is set to On, this adjustment controls the intensity of the G.I. and controlled lamps once the game has been idle for a specified period of time.

Settings: 4-7

A.1 31 Ticket Expansion Board

When a Ticket Expansion Board is connected, full control of the ticket dispenser is available. This includes a ticket low/error lamp, resume on ticket jam, and manual ticket dispense switch. The choices are:

Yes - Ticket Expansion Board is connected.
No - Ticket Expansion Board is NOT installed in the game.

Press the Escape button to return to the Adjustments Menu. Press the Up button to advance to the next desired Adjustments Group, (or press the Down button to return to a previous group). Press the Enter button to activate. Use the Up or Down button to cycle through the available adjustments.

A.2 Feature Adjustments

A.2 01 Extra Ball Percent

This is used to enter the desired extra ball percentage. The House and Train Wreck extra balls always remain fixed, and the Bear Kick extra ball threshold will automatically be modified to reach the desired percentage.

Range: 15% - 40%
Set to "Fixed" to disable the automatic percentaging of the Bear Kick Extra Ball.

A.2 02 Bear Kick Extra Ball 1

This is the number of Bear Kicks that will light the 1st extra ball. The machine will start with this value and modify it as necessary to achieve the percentage specified in A.2 01. To use a fixed level for the 1st extra ball, set A.2 01 to "fixed" and set this level here.

Range: OFF, 4-12

A.2 03 Bear Kick Extra Ball 2

This determines whether a 2nd extra ball is available at 50 Bear Kicks.

Range: OFF, 30-99

A.2 04 Train Wreck Extra Ball

This is the number of train wrecks that will light the Train Wreck extra ball.

Setting: On/Off

A.2 05 Bear Extra Ball Memory

This determines whether extra balls lit from the Bear Kick feature remain in memory from ball to ball.

Setting: Yes/No

A.2 06 House Extra Ball Memory

This determines whether extra balls lit from the Mansion feature remain in memory from ball to ball.

Setting: Yes/No

A.2 07 Train Extra Ball Memory
This determines whether extra balls lit from the Train Wreck feature remain in memory from ball to ball.

Setting: Yes/No

A.2 08 Last Thing Lock
This determines that last multiball in which Thing is allowed to help lock the balls.

Range: Off, 1 - 5

A.2 09 Last Swamp Lock
This determines that last multiball in which balls may be locked in the Swamp.

Range: 1 - 5

A.2 10 Last Chair Release
This determines that last multiball in which multiball may begin from an Electric Chair shot.

Range: Off, 0 - 5

A.2 11 Jackpot Carryover
When set to "Yes", a player's uncollected Jackpot will carry over to subsequent multiball. If set to "No" the Jackpot value will reset to 10 Million at the start of each multiball. Anytime the Jackpot is collected, it automatically resets to 10 Million.

Setting: Yes/No

A.2 12 Million Plus Memory
This determines whether the side ramp Million Plus feature carries over from ball to ball or is reset to one million at the start of each ball.

Setting: Yes/No

A.2 13 Million Plus Maximum
This sets the maximum value for the side ramp Million Plus feature. Subsequent shots will award this maximum value without increasing.

Range: 5,000,000 - 20,000,000

A.2 14 Hurry Up Start
This is the starting (maximum) value for the Thing "Hurry Up" quick multiball feature. The award will start at this value and count down to 3,000,000.

Range: 10,000,000 - 20,000,000

A.2 15 House From Swamp
This allows the Mansion awards to be awarded by balls entering the Swamp kickout.

Setting: Yes/No

A.2 16 Free Thing Lamps
This gives each player this many lamps in the T-H-I-N-G spell out at the start of each game.

Range: 0 - 5

A.2 17 Raise Dead Hits
This is the number of hits on each bumper required to complete the bumper for the "Raise the Dead" mode.
Range: 3 - 9

A.2 18 Train Wreck Hits
This is the number of hits required for the 1st Train Wreck. Each subsequent Train Wreck requires 1 additional hit up to a maximum of 6.

Range: 2-4

A.2 19 Special Memory
This determines the Special (which is lit by the "Tour The Mansion" feature) stays in memory from ball to ball

Setting: Yes/No

A.2 20 Disable THING
Set to "Yes" to stop the operation of the Thing hand.

Setting: Yes/No

A.2 21 Disable BOOKCASE
Set to "Yes" to stop the operation of the Bookcase.

Setting: Yes/No

A.2 22 Train Wreck Memory
This determines whether the Train Wreck progress is maintained ball to ball (yes), or reset every ball (no).

A.2 23 Quick Multiball Memory
This determines whether the quick multiball lamp (earned as a Mansion award) carries over from ball to ball

Setting: Yes/No

A.2 24 Green Lock Lamp
Certain prototype games did not have the Green Lock lamp hanging over the "Thing" shot. By setting this adjustment to "NO", the game will use the yellow "Multiball" lamp in its place.

Setting: Yes/No

A.2 25 Tour the Mansion Extra Ball Memory
When an extra ball is lit from "Tour the Mansion", this adjustment determines whether that extra ball is carried over from ball to ball.

A.2 29 Gameover Kick Out
When set to yes, any locked balls will be kicked out of the lockup at game over.
Setting: Yes/No

A.2 30 Buy Extra Ball
This determines whether each player may buy extra balls for 1 credit at the end of the game.

A.2 31 Max. Buy in Balls
This determines the number of extra balls a player is allowed to buy per game

Range: 1 - 99

A.2 32 Items in Masion
Determines the number of Cousin It's items that will be hidden in the mansion.

Range: 1 - 4

Press the Up button to advance to the next desired Adjustment Group, (or press the Down button to return to a previous Adjustment Group). Press the Enter button to activate that group. Press the Up or Down button to cycle through the available adjustments in that group.

A. 3 Pricing Adjustments

A.3 01 Game Pricing (if set to custom, then 02 to 09 are available)
The operator chooses the cost for a game from a selection of Standard pricing or by installing Custom pricing.

A.3 02 Left Coin Units
The operator can specify the number of coin units purchased by a coin passing through the left coin chute.

A.3 03 Center Coin Units
The operator can specify the number of coin units purchased by a coin passing through the center coin chute.

A.3 04 Right Coin Units
The operator can specify the number of coin units purchased by a coin passing through the right coin chute.

A.3 05 4th Slot Units
The operator can specify the number of coin units purchased by a coin passing through the fourth coin chute.

A.3 06 Units/Credits
The operator defines the number of coin units required to obtain 1 credit. A coin unit counter in the game program totals the number of coin units purchased through all coin chutes prior to each game. If the total number of these coin units exceeds or matches the Unit per Credit value by a multiple (or more, coin units) of the specified Units per Credit value the Credits display shows the proper number of credits. The coin unit counter retains any remaining coin units, until the start of Ball 2; then the coin unit counter is cleared (its contents are zeroed).

A.3 07 Units/Bonus
The operator can specify that additional credits are to be indicated in the credits display, when a certain number of coin units are accumulated.

A.3 08 Bonus Credits
The operator specifies the number of credits that are awarded when the Units/Bonus level is achieved.

A.3 09 Minimum Units
The operator can specify that No credits are to be posted (indicated in the credit display), until the credits unit counter reaches a particular value, by setting this value to 02 (or more).

A.3 10 Coin Door Type (If set to custom, then 11 to 15 are available)
This adjustment is used to preset adjustments 11 to 15 based on standard coin doors (U.S.A., German, Etc.).

A.3 11 Collection Text
The operator chooses what coin system is used to display the Earning Audits.

A.3 12 Left Slot Value
The operator can specify the monetary value of the left coin chute.

A.3 13 Center Slot Value
The operator can specify the monetary value of the center coin chute.

A.3 14 Right Slot Value
The operator can specify the monetary value of the right coin chute.

A.3 15 4th Slot Value
The operator can specify the monetary value of the 4th coin chute.

A.3 16 Maximum Credits
The operator can specify the maximum number of credits the game can accumulate, either through game play awards or coin purchases. The range of this setting is 5 through 10. Reaching the specified setting prevents the award of any credits.

A.3 17 Free Play
The operator can specify whether a player can operate the game without a coin (free play) or with a coin. The choices are:

NO - A coin is necessary for game play.
YES - Game play is free; no coin required.

A.3 18 Hide Coin Audits

The operator chooses whether or not to show the coin audits. The choices are:

YES	-	The coin audits are not displayed.
NO	-	The coin audits are displayed.
HIDE NAMES	-	The coin audit value is shown but not the audit name.

A.3 19 1 Coin Buy-in

If the game pricing is set to 1 for 50¢/2 for $1.00 the operator chooses whether the player is allowed to 'buy-in' a subsequent game for 1 coin. The number of games that may be purchased at this cost is determined by the number of players in the previous game; that is, if the previous game had three players, 3 Credits can be purchased at the rate of 1 coin per credit. **Note that this is not the same feature that allows the player to buy an extra ball at the end of the game. See A.2 30 "Buy Extra Ball".**

YES	-	The player has 10 seconds to buy-in at 1 coin per game.
NO	-	The buy-in feature is disabled.

A.3 20 Base Coin Size

This number is used for the ticket per coin calculations.

A.3 21 Coin Meter Units

It is possible to connect a coin meter to the knocker coil driver which will log all coins through all slots. This adjustment activates the use of the knocker driver for this purpose, and determines the value of each unit on the meter. For example, to show the total amount of money collected as "total quarters", set this adjustment to "0.25". To show the amount of money collected as "total dollars", set this adjustment to "1.00".

Setting this adjustment to anything other than Off establishes the coin unit for a meter attached to the knocker driver, and overrides use of the knocker during awards.

Pricing Table

Country	Coin Chutes Left	Center	Right	4th Chute	Games/Coins	Display	Pricing Adjustments A3 02 03 04 05 06 07 08 09
USA	25¢	$1.00*	25¢	$1.00	1/50¢, 2/75¢, 3/$1 [2]	50¢, 75¢, $1.00	
	25	$1.00	25¢	$1.00	1/3X25¢ [2]	USA1 1/$0.75	
	25	$1.00	25¢	$1.00	1/50¢, 2/$1 [2]	USA 2/$1.00	
	25	$1.00	25¢	$1.00	1/50¢, 3/$1.00 [2]	USA 3/$1.00	
	25	$1.00	25¢	$1.00	1/2x25¢, 2/4x25¢, 3/$1.00 [2]	3/$1.00 Coin	
	25	$1.00	25¢	$1.00	1/2x25¢, 2/$1.00, 3/$1.50, 6/$2.00 [2]	USA 6/$2.00	
	25	$1.00	25¢	$1.00	1/2x25¢, 2/$1.00, 3/$1.50, 5/$2.00 [2]	USA 5/$2.00	
	25	$1.00	25¢	$1.00	1/3X25¢, 2/$1.50, 4/$2.00 [2]	1/.75, 4/$2.00	
	25	$1.00	25¢	$1.00	1/2x25¢, 2/$1.00, 4/$1.50, 6/$2.00 [1,2]	6/$2.00 4/$1.50	
	25¢	25¢	25¢	-	1/4x25¢, 6/$5.00	1/1, 6/5	
	25¢	25¢	25¢	-	1/4x25¢	1/$1.00	
Canada	25¢	-	$1.00	-	1/50¢, 2/75¢, 3/$1	CANADA 1	
					1/50¢, 2/$1 [2]	CANADA 2	
Austria	5sch	10sch	10sch	-	1/2x5sch, 3/2x10sch [2]	AUSTRIA	
	5sch	-	10sch	-	2/5sch, 5/10sch	CUSTOM	02 00 05 00 01 00 01 00
Australia	20¢	$1	$1	$2	1/$1, 3/$2 [2]	AUSTRALIA 1	
	20¢	$1	$1	$2	1/$1, 2/$2	AUSTRALIA 2	
U.K.	£1.00	50P	20P	10P	1/3x10P, 2/50P, 4/£1 [2]	U. KINGDOM	
Switzerland	1Fr	2Fr	5Fr	-	1/1Fr, 3/2Fr, 7/5Fr [2]	SWISS 1	
	1Fr	2Fr	5Fr	-	1/2Fr, 2/3Fr, 3/4Fr, 5/5F	SWISS 2	
Belgium	5Fr	20Fr	50Fr	-	1/4x5Fr, 1/20Fr, 3/50Fr [2]	BELGIUM	
Germany	1DM	2DM	5DM	-	1/2DM, 2/3DM, 3/4DM, 5/5DM [2]	GER. 1/2DM	
					1/1DM, 2/2DM, 5/5DM [2]	GER. 1/1DM	
					1/1DM, 2/2DM, 6/5DM [1,2]	GER. 6/5DM	
Holland	1G	-	1G	-	1/1G [2]	HOLLAND	
Sweden	1Kr	5Kr	10Kr	-	1/5x1Kr, 1/5kr, 2/10Kr [1,2]	SWEDEN 1	
	5Kr	5kr	5Kr	-	1/5Kr [2]	SWEDEN 2	
France	1Fr	5Fr	10Fr	20Fr	1/3x1Fr, 2/5Fr, 5/10Fr , 10/20Fr [2,3]	TARIF 1	
	1Fr	5Fr	10Fr	20Fr	1/2x1Fr, 3/5Fr, 7/10Fr ,14/20Fr [2,3]	TARIF 2	
	1Fr	5Fr	10Fr	20Fr	1/5Fr, 3/10Fr, 7/2x10Fr , 7/20Fr [1,2,3]	TARIF 3	
	1Fr	5Fr	10Fr	20Fr	2/5Fr, 4/10Fr,9/2x10Fr , 9/20Fr [2,3]	TARIF 4	
	1Fr	5Fr	10Fr	20Fr	2/5Fr, 5/10Fr, 11/2x10Fr , 11/20Fr [2,3]	TARIF 5	
	1Fr	5Fr	10Fr	20Fr	1/5Fr, 3/10Fr , 6/20Fr [2,3]	TARIF 6	
Italy	500L	500L	500L	-	1/500L [2]	ITALY 1	
	500L	500L	500L	-	1/2x500L, 3/4x500L [1,2]	ITALY 2	
	500L	500L	500L	-	1/500L, 2/1000L	ITALY 3	
Spain	100P	-	500P	-	1/100P, 6/500P [2]	SPAIN	
	25P	-	100P	-	1/25P, 5/100P	CUSTOM	01 00 04 00 01 04 01 00
	25P	-	100P	-	1/25P, 4/100P	CUSTOM	01 00 04 00 01 00 01 00
	25P	-	100P	-	1/2x25P, 2/100P	CUSTOM	01 00 04 00 02 00 01 00
	25P	-	100P	-	1/2x25P, 3/100P	CUSTOM	03 00 12 00 04 00 01 06
Japan	100¥	-	100¥	-	1/100¥ [2]	JAPAN	
Chile	Token	-	Token	-	1/1Token [2]	CHILE	
Denmark	1Kr	5Kr	10Kr	-	1/3x1 Kr, 3/5 Kr, 7/10 Kr [2]	DENMARK	
Finland	1Mka	-	5Mka	-	1/2x1Mka, 3/5Mka [2]	FINLAND 1	
	1Mka	-	5Mka	-	1/3x1Mka, 2/5Mka [2]	FINLAND 2	
New Zealand	$1.00	-	$2.00	-	1/$1, 3/$2	NEW ZEALAND 1	
	$2.00	-	$1.00	-	1/$1, 3/$2, ($2-$1 door)	NEW ZEALAND 2	
Norway	5Kr	-	10Kr	-	1/5Kr, 2/10Kr, 5/20Kr [2]	NORWAY	
Argentina	10¢	10¢	10¢	-	1/1 Token [2]	ARGENTINA	
Greece	10D	20D	50D	-	1/2x10D, 1/20D, 3/50D	GREECE	
Antilles	25¢	25¢	1G	-	1/25¢, 4/1G	ANTILLES	
Netherlands	1Hfl	2.5Hfl	2.5Hfl	-	1/1Hfl, 3/2.5Hfl	NETHERLANDS	
Hungary	10F	10F	20F	-	1/1x20F, 1/2x10F, 3/2x20F [2]	HUNGARY	

Note: 1. Factory Default. 2. Standard Setting - Change by pressing Enter button. 3. Other functions are also affected.
* Only if Bill Acceptor and Center Coin Chute are available.

Press the Escape button to return to the Adjustment Menu. Press the Up button to advance to the next desired Adjustment Group, (or press the Down button to return to a previous Adjustment Group). Press the Enter button to activate that group. Press the Up or Down button to cycle through the available adjustments in that group.

A.4 H.S.T.D. Adjustments

A.4 01 Highest Scores

The operator specifies whether the game is to maintain a record of the four highest scores achieved to date. The choices are:

OFF - No high scores are recorded, or displayed.
ON - The four highest scores are stored in memory and displayed in the Attract Mode.

A.4 02 H.S.T.D. Award

The operator chooses the award given for achieving the High Score To Date, or the Champion H.S.T.D.. The choices are a Credit or a Ticket.

A.4 03 Champion H.S.T.D.

The operator chooses whether the "Highest" High Score is displayed in the Attract Mode. This score is not cleared when "High Score Reset Every" occurs. The choices are:

ON - The "Highest" High Score is retained in memory and displayed.
OFF - The "Highest" High Score is not retained.

A.4 04 Champion Credits

The operator chooses the number of credits or tickets awarded for a Grand Champion Score. The range of this setting is 00 through 10.

A.4 05 H.S.T.D. 1 Credits

The operator selects the number of credits or tickets to be awarded whenever a player exceeds the previous Highest Score. The range of this setting is 00 to 10.

A.4 06 H.S.T.D. 2 Credits

The operator selects the number of credits or tickets to be awarded whenever a player exceeds the second highest score. The range of this setting is 00 to 10.

A.4 07 H.S.T.D. 3 Credits

The operator selects the number of credits or tickets to be awarded whenever a player exceeds the third highest score. The range of this setting is 00 to 10.

A.4 08 H.S.T.D. 4 Credits

The operator selects the number of credits or tickets to be awarded whenever a player exceeds the fourth highest score. The range of this setting is 00 to 10.

A.4 09 High Score Reset Every

The operator can specify that the game will provide an automatic reset of the displayed "Highest scores", and the number of games to be played before the reset occurs. The values provided upon reset are those selected by the operator in the Back-up High Scores. The range of this setting is OFF (disabled) and 250 to 20, 000.

A.4 10 Backup Champion

The operator sets the Back-up Grand Champion Score. The range of this setting is 00 through 99, 900, 000.

A.4 11 Backup H.S.T.D. 1

The operator can set the Back-up High Score value. The game automatically restores this value when the High Score Reset Every value is reached. The range of this setting is 00 to 99,900,000.

A.4 12 Backup H.S.T.D. 2

The operator can set the second Back-up High Score value. The game automatically restores this value when the High Score Reset Every value is reached. The range of this setting is 00 to 99,900,000.

A.4 13 Backup H.S.T.D. 3

The operator can set the third Back-up High Score value. The game automatically restores this value when the High Score Reset Every value is reached. The range of this setting is 00 to 99,900,000.

A.4 14 Backup H.S.T.D. 4

The operator can set the fourth Back-up High Score value. The game automatically restores this value when the High Score Reset Every value is reached. The range of this setting is 00 to 99,900,000.

Press the Up button to advance to the next desired Adjustment Group, (or press the Down button to return to a previous Adjustment Group). Press the Enter button to activate that group. Press the Up or Down button to cycle through the available adjustments in that group.

A.5 Printer Adjustments (optional board required)

A.5 01 Column Width

The operator chooses the column width to be printed. The range of this setting is 22 through 80.

A.5 02 Lines Per Page

The operator chooses the amount of lines per page. The range of this setting is 20 through 80.

A.5 03 Pause Every Page

The operator chooses whether the printer pauses at the end of a page. The choices are:

YES - The printer does pause.
NO - The printer doesn't pause.

A.5 04 Printer Type

The operator selects which kind of printer to use. The choices are Parallel, Serial or ADP.

A.5 05 Serial Baud Rate

The operator selects which baud rate to use for Serial or ADP communications (bit rate). The choices are 300, 600, 1200, 2400, 4800. or 9600.

A.5 06 Serial D.T.R. (Data Terminal Ready)

When a Serial Printer is used, this line may be connected to a printer output line signaling that the printer is busy.

Normal = Normal D.T.R. signal goes low to indicate the printer is not ready.

Inverted = Inverted D.T.R. (busy) signal goes high to indicate printer is not ready.

Ignore = D.T.R. signal is ignored.

Press the Escape button to return to the Adjustments Menu. Then, either press the Up or Down button to return to a previous Adjustment Menu Group, or press the Escape button again to return to the Main Menu. Once in the Main Menu, either press the Up button to advance to the next menu selection, the Bookkeeping Menu, or press the Down button to to return to a previous Main Menu selection.

PROBLEM ANALYSIS MESSAGES

The WPC game program has the capability to aid the operator and service personnel. At Game Turn-on or after pressing the Begin Test switch, once the game has been operating for an extended period, the display may signal with a message, "Press ENTER for Test Report". This indicates the game program has detected a possible problem with the game.

To obtain details of the problem, open the coin door and press the Begin Test switch. Press the Enter button to begin displaying the message(s). The following messages apply to this game.

Check Switch ##.

This message indicates that at least one switch was stuck 'On' at game turn-on or has NOT been actuated during ball play (for 90 balls or ≈30 games) by displaying the message "Adjust Switch ##", listing each problem switch by number. (The game program compensates the game play requirements affected by each disabled switch to allow 'nearly normal' play. This helps keep the game earning, until the service technician can repair the problem, bringing the game back to its normal good profits!)

To verify the problem, refer to the Test Menu text describing Switch Testing, and check each reported switch using applicable switch tests. Always check switch operation using a ball, to simulate game conditions. (Switch problems may often be resolved by adjusting the wire switch actuators, fixing switch circuitry problems, securing loose connectors, etc. Mechanisms using 'opto switches' (drop targets, etc.) need to be checked for proper power connections (+12V dc and ground).

Pinball Missing.

The game normally uses three balls; however, it will operate with one ball. This message announces that a ball is missing or stuck somewhere. When the ball is located, return it to the game via the Outhole. Other possibilities for this problem could be malfunctions of the Ball Trough switches or the Ball Shooter switch.

xxxxx Sw. is Stuck On.

This message indicates that a switch, which is not usually On, remains in the On position after the game is switched On. The stuck switch is essential for game play (for example, a coin chute switch, the slam tilt switch, the plumb bob tilt switch), and should be cleared to permit proper game operation.

Ground Short Row-N, Wht-xxx.

Frequent appearance of this message requires activation of the Switch Levels Test to locate the switch causing the "WHT-xxx ROW x SHORT" message. Possible 'row short' causes are: 1) Slam Tilt (or other coin door) switch touching the grounded coin door; 2) A leaf-type, playfield switch touching a grounded part; 3) Players poking metallic objects (wires, coat hangers, etc.) into the game; 4) Switch cable insulation pierced or damaged allowing bare wire contact with a grounded part; 5) All switches in a row closing at the same time (Note: This instance is NOT a switch problem; however, for most games this is a very rare possibility).

Factory Settings Restored.

Repeated appearance of this message indicates that the CMOS RAM no longer retains any custom Pricing or Game Adjustment settings and has reverted to factory default settings. Generally, the following CPU checks will isolate the cause of the CMOS RAM memory failure. The voltage at pin 28 and pin 26 of U8 should be +5V (game turned On) and at least +4V (game turned Off). When the voltage drops below +4 V, memory reset occurs. Check the batteries and battery holder. Be sure that the batteries are good and that there is no contamination on the battery holder terminals. Turn the game OFF, and use an ohmmeter to check diodes D1 and D2 on the CPU Board. D1 should read 0 ohms when forward-biased and infinite ohms when reverse-biased. D2 should read 15 ohms when forward-biased and infinite ohms when reverse-biased.

U6 Checksum Error.

The game ROM checksum is invalid. If this occurs replace the game ROM.

Time and Date Not Set.

The real time clock is not running. If this occurs go to U.4 of the Utilities Menu and set the time and date.

CPU L.E.D.'s

The CPU has three L.E.D.'s located on the upper left side of the board: D19, D20, and D21. On game power-up D19 and D21 turn on for a moment then, D19 turns off and D20 starts to blink rapidly. D21 remains on. The system has detected a problem if the following happens:

CPU Board L.E.D. Error Codes

Center L.E.D. blinks one time	-	ROM Error U6
Center L.E.D. blinks two times	-	RAM Error U8
Center L.E.D. blinks three times	-	Custom Chip Failure U9

Sound Board Beep Error Codes Upon Game Turn-On:

1 Beep	=	Sound Board O.K.
2 Beeps	=	U9 Failure (RAM)
3 Beeps	=	U18 Failure (ROM)
4 Beeps	=	U15 Failure (ROM)
5 Beeps	=	U14 Failure (ROM)

LED List

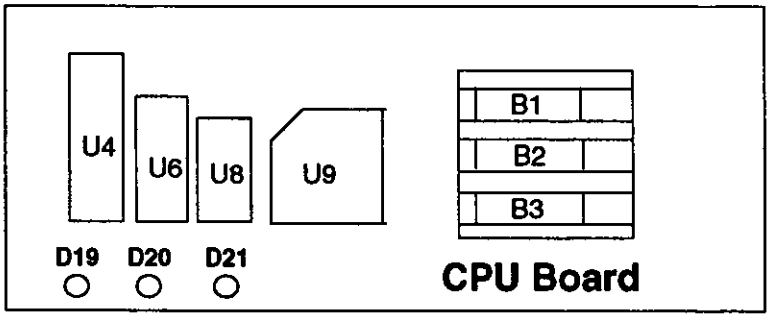

CPU Board
D19, Blanking
D20, Diagnostic
D21, +5vdc
At Game Turn-On = D19 & D21 On, D20 Off
During Normal Operation = D19 Off, D20 flashing, D21 On

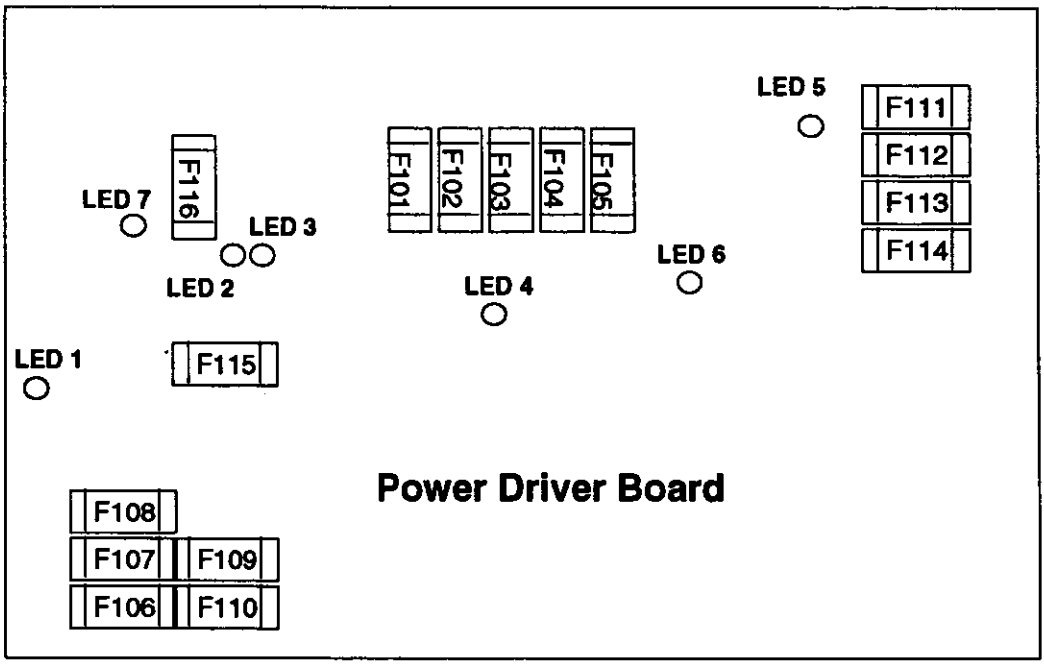

Power Driver Board
LED 1, +12vdc, Switch Circuit, Normally On
LED 2, High/Low Line Voltage Sensor, Normally On
LED 3, High/Low Line Voltage Sensor, Normally Off
LED 4, +5vdc, Digital Circuit, Normally On
LED 5, +20vdc, Flashlamp Circuit, Normally On
LED 6, +18vdc, Lamps Circuit, Normally On
LED 7, +12vdc, Power Circuit (Motors, Relays, Etc.), Normally On

Fuse List

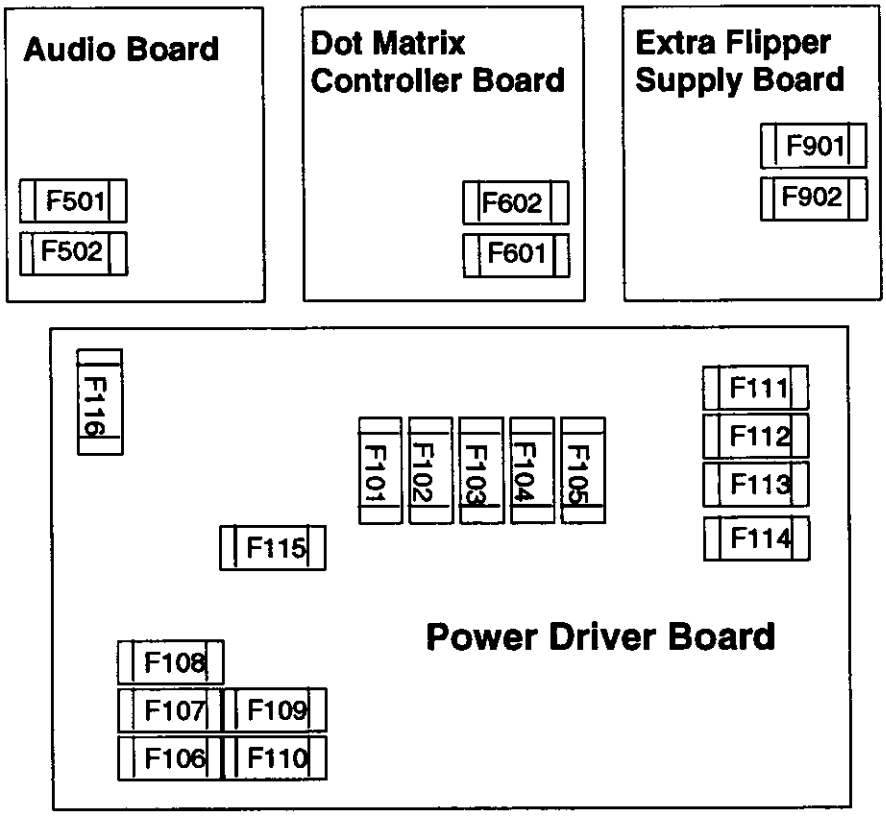

Audio Board

F501	-25V Circuit	3A, S.B.
F502	+25V Circuit	3A, S.B.

Dot Matrix Controller Board

F601	+80V A.C.	3/8A, S.B.
F602	+100V A.C.	3/8A, S.B.

Power Driver Board

F101	Lower Left Flipper	3A, S.B.
F102	Lower Right Flipper	3A, S.B.
F103	Solenoids 25-28	3A, S.B.
F104	Solenoids 9-16	3A, S.B.
F105	Solenoids 1-8	3A, S.B.
F106	G.I. #2 Wht-Vio	5A, S.B.
F107	G.I. #3 Wht-Yel	5A, S.B.
F108	G.I. #5 Wht-Grn	5A, S.B.
F109	G.I. #4 Wht-Orn	5A, S.B.
F110	G.I. #1 Wht-Brn	5A, S.B.
F111	Flasher Secondary	5A, S.B.
F112	Solenoid Secondary	7A, S.B.
F113	+5V Logic	5A, S.B.
F114	+18V Lamp Matrix	8A, N.B.
F115	+12V Switch Matrix	3/4A, S.B.
F116	+12V Secondary	3A, S.B.

Extra Flipper Supply Board

F901	Upper Left Flipper	3A, S.B.
F902	Upper Right Flipper	3A, S.B.

Line Filter

Domestic Game	8A, N.B.
Foreign Game	4A, S.B.

MAINTENANCE INFORMATION

Regular maintenance is essential to a game's continuing contribution to the operator's earnings.

LUBRICATION

The two main lubrication points of the Ball Shooter Lane Feeder mechanism are the pivots for the arm. Note that the mechanism of other playfield devices are somewhat similar to the Ball Shooter Lane Feeder Device; and have the same lubrication requirements as the Ball Shooter Lane Feeder Device. A switch target grease is satisfactory for these devices.

Because of the functional design (arm-actuated via solenoid plunger operation), the pivot points of the Left and Right Kickers ("Slingshots") all require lubrication as a regular servicing procedure.

Lubrication to ensure proper operation also applies to the target blades of the Drop Targets. MBI Instrument Grease, also known as Drop Target Switch Lubricant, with a Williams' part number of 20-8886, is a recommended lubricant.

SWITCH CONTACTS

For proper game operation, switch contacts should be free of dust, dirt, contamination, and corrosion. Blade switch contacts are plated to resist corrosion. Cleaning blade switch contacts requires gentle closing of the contacts on a clean business card or piece of paper, and then pulling the paper about 2 inches, which should restore the clean contact surface. Adjust the switch contacts to a 1/16-inch gap.

CLEANING

Good game action and extended playfield life are the results of regular playfield cleaning. During each collection stop, the playfield glass should be removed and thoroughly cleaned and the playfield should be wiped off with a clean, lint-free cloth. The game balls should be cleaned and inspected for any chips, nicks, or pits. Replace any damaged balls to prevent playfield damage.

Regular, more extensive, playfield cleaning is recommended. However, avoid excessive use of water and caustic or abrasive cleaners because they tend to damage the playfield surface. Playfield wax (or any carnauba based wax), or polish may be used sparingly, to prevent a buildup on the playfield surface. Do not use cleaners containing petroleum distillates on any playfield plastics because they may dissolve the plastic material or damage the artwork.

Notes...

Section 2

Game Parts Information

Cabinet Assembly
Backbox Assembly
WPC Audio Board
WPC System CPU Board
WPC Power Driver Board
Dot Matrix Controller Board
Flipper Controller Board
Major Mechanism Assemblies
Upper Playfield Parts
Lower Playfield Parts
Lamps
Switches
Solenoids/Flashers

Backbox Assembly

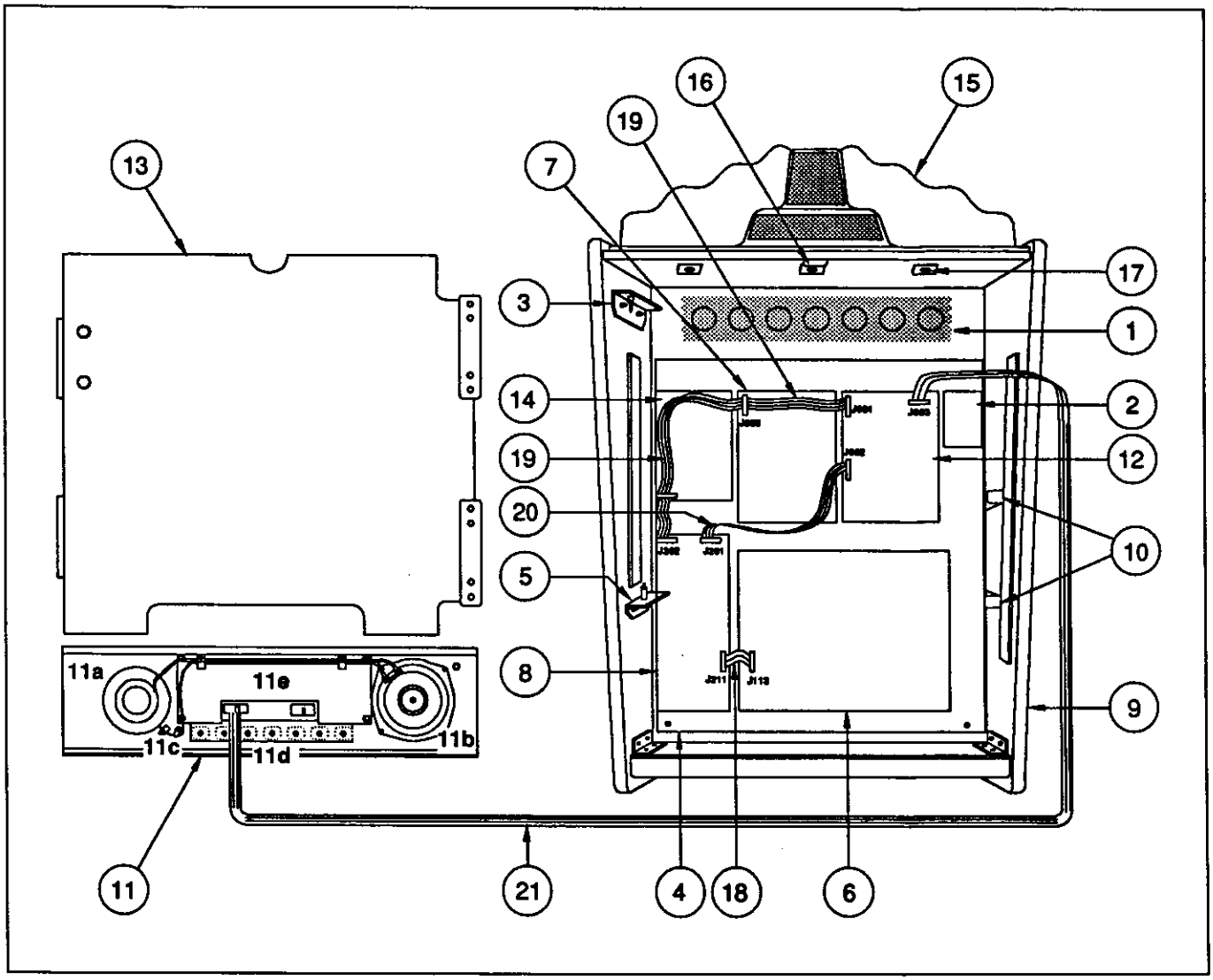

Item	Part Number	Description
1.	01-6645	Venting Screen
2.	A-15416	Extra Flipper Supply Board
3.	A-12497	Upper Insert Bd. Hinge Assy.
4.	A-14092-2	Mounting Plate Assembly
5.	A-12498	Lower Insert Bd. Hinge Assy.
6.	A-12697-3	Power Driver Assembly
7.	A-12738-50038	WPC Sound Board
8.	A-12742-50038	WPC CPU Security Board
9.	A-14376-50038	Backbox Assembly
10.	01-9047	Insert Stop Bracket
11.	A-15212	Speaker / Display Assy.
a)	5555-12924-00	Speaker, 4Ω, 15w Tweeter
b)	5555-12856-00	Speaker, 4Ω, 5-1/4", 25w
c)	5045-12914-00	Capacitor, 10µfd 50v,±20%
d)	D-12501	7-Lamp Board
e)	5901-12784-00	Dot Matrix Display
12.	A-14039	Dot Matrix Contoller Board
13.	20017-IN	Insert Board
14.	A-15028	Flipper Controller Board

Item	Part Number	Description
15.	03-8643	Cloud
	31-1672-	Decal Set, Cloud
16.	A-13379	Lock & Plate Assembly
17.	A-15280	Single Flashlamp Bd. (3 Used)

■ Ribbon Cables:

18.	5795-12653-03	Ribbon Cable, 3"
19.	5795-13018-00	Ribbon Cable, 22"
20.	5795-10938-14	Ribbon Cable, 14"
21.	5795-12838-30	Ribbon Cable, 30"

■ Miscellaneous Parts:

A-8552-20017	Tempered Backglass Assy.
08-7456	Backbox Glass: 27" x 18-7/8"
31-1357-20017	Screened Translight
03-8228-2	Glass Channel Top (1)
03-8228-3	Glass Channel Edge (2)
03-8229-1	Glass Lift Channel (1)

Cabinet Assembly

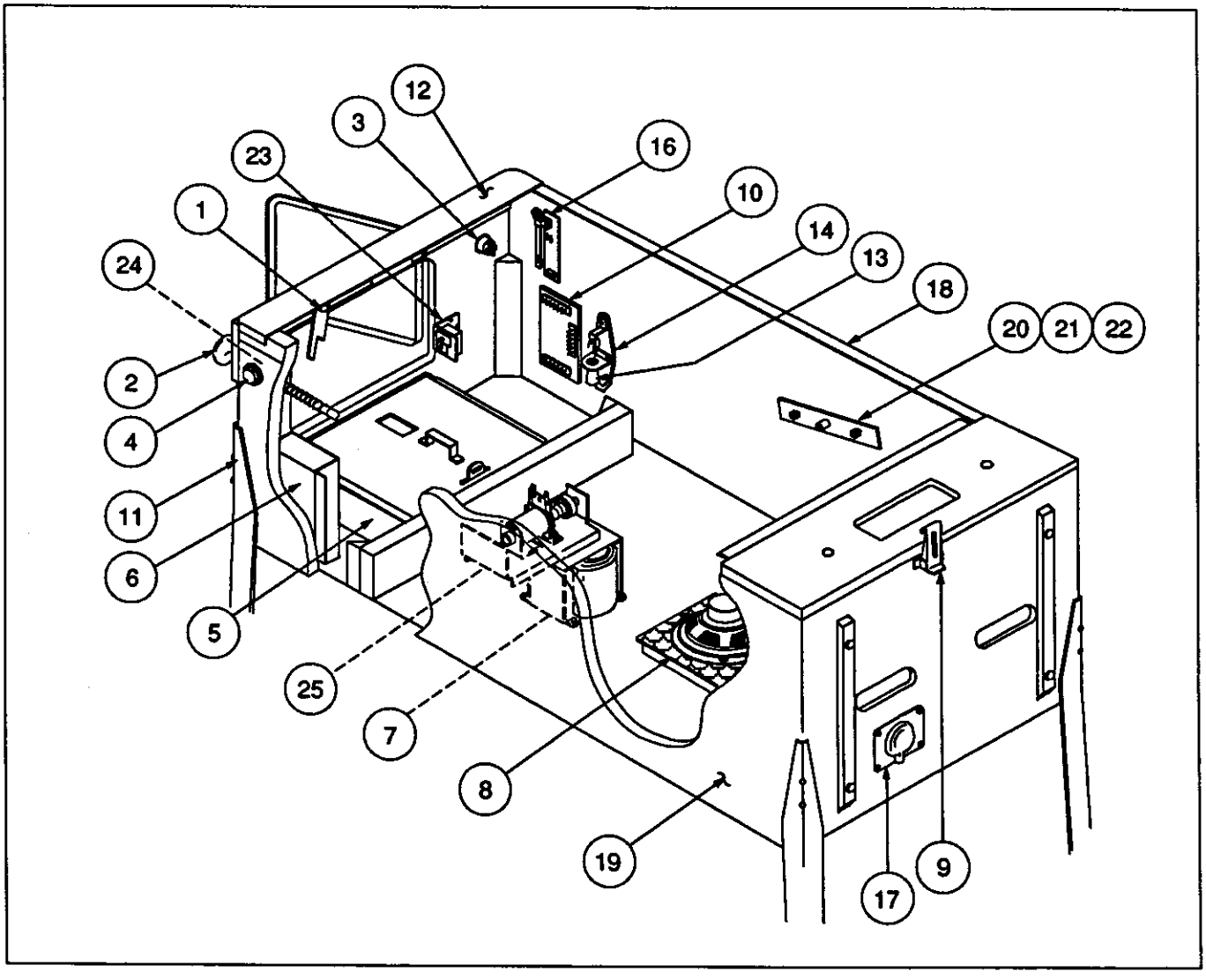

Item	Part Number	Description
1.	A-16773	Lever Guide Assembly
2.	B-12445-4-BR	Ball Shooter Assembly, Brass
3.	20-9663-1	Start Button, Clear
4.	A-16883-6	Flipper Button - Yellow (2 Used)
5.	A-18203-1	3-Ball Cashbox Assembly
6.	*	Line Filter Assembly
7.	5610-12835-00	Transformer, 115/230v
8.	5555-12929-00	Speaker, 4Ω, 6", 25w
9.	20-9347	Toggle Latch
10.	A-14689-1	Coin Door Interface Bd.
11.	C-10843-BR	Metal Leg Assembly, Brass
12.	A-18257	Front Molding Assembly, Brass
13.	20-6502-A	Plum Bob
14.	A-15361	Tilt Mechanism Assembly
15.	*	Cordset
16.	A-17316	Opto Flipper Assembly (2 Used)
17.	01-10714	Line Cord Cover
18.	A-12359-3-BR	Side Molding, Brass (2 Used)
19.	11-1177	Wood Cabinet

*See Application Chart (p.2-30).

Item	Part Number	Description
20.	01-11408	Spacer (2 Used)
21.	02-4329	Pivot Nut, 1/2 (2 Used)
22.	02-4352	Pivot Bushing (2 Used)
23.	A-17175-1	Cable & Interlock Switch Assy.
24.	A-18524	Switch Button & Cable Assembly
	20-9663-9	Buy-In Button
25.	A-15267	Knocker Assembly

■ Miscellaneous Parts:

08-7028-1	Tempered Playfield Glass, Wide Body: 23.75" x 43"
01-10797	Playfield Support Bar, 18" Long
01-11791	Service Switch Actuator
01-12352	Clip Bracket
08-7377	Leg Leveler Adjuster, 3"
20-6500	Steel Ball, 1-1/16" (3)
A-17195	Tilt Switch Assy. w/Cable
01-9011-R	Backbox Mounting Brkt., Left
01-9011-L	Backbox Mounting Brkt., Right

A-12742-50038 WPC CPU Board Assembly

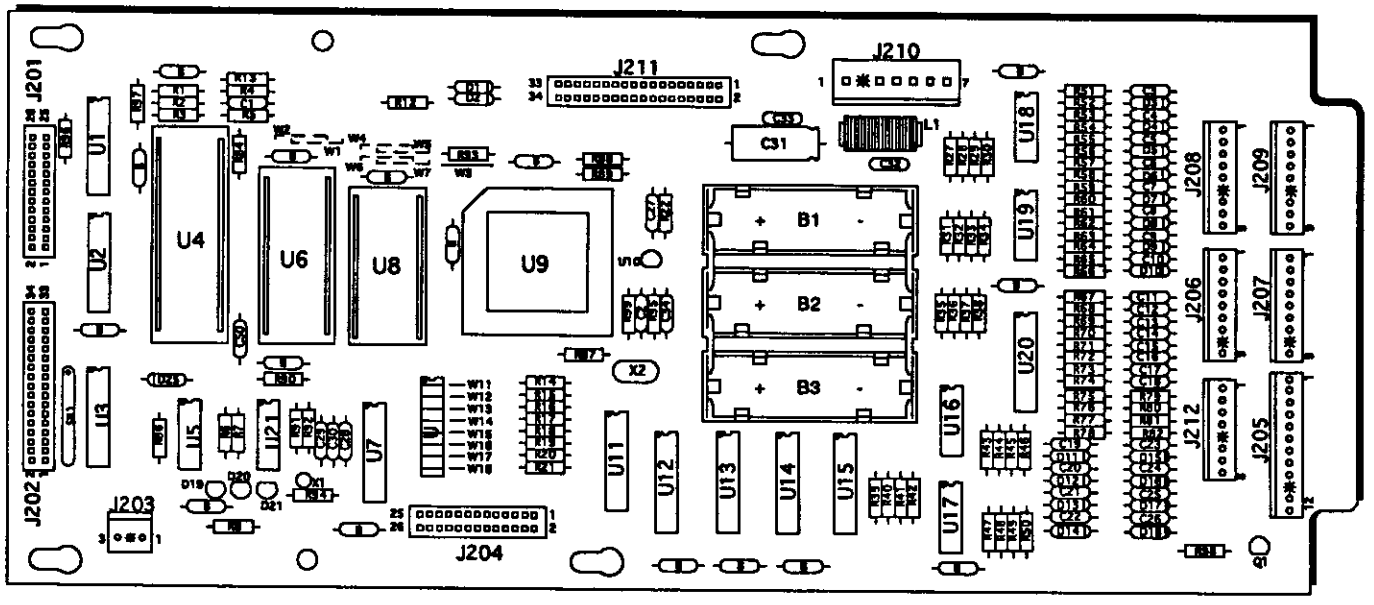

Part Number	Designator	Description
5010-09034-00	R14-R22, R27-R42, R86, R90, R94, R98	Resistor, 10KΩ, 1/4w, 5%
5010-09085-00	R1, R2, R4, R96, R97	Resistor, 1.5KΩ, 1/4w, 5%
5010-09314-00	R52, R54, R56, R58, R60, R62, R64, R66, R75-R82	Resistor, 1.2KΩ, 1/4w, 5%
5010-09358-00	R3, R43-R51, R53, R55, R57, R59, R61, R63, R65, R67-R74, R84	Resistor, 1KΩ, 1/4w, 5%
5010-09416-00	R5-R8, R12, R13, R87-R89	Resistor, 470Ω, 1/4w, 5%
5010-09534-00	W1, W3, W4, W7	Resistor, 0Ω
5010-10258-00	R95, R99	Resistor, .01µfdΩ, 1/4w, 5%
5010-10989-00	R92	Resistor, 470KΩ, 1/4w, 5%
5010-12104-00	R91	Resistor, 22µfd, 1/4w, 5%
5019-09362-00	SIP 1	SIP, 9R, 10-pin, 4.7KΩ, 5%
5040-08986-00	C31	Capacitor, 100µfd, 10v (±20%)
5043-08980-00	B	Capacitor, .01µfd, 50v, (+80, -20%)
5043-09030-00	C27	Capacitor, 0.047µfd, 50v (±20%)
5043-09065-00	C3 - C26	Capacitor, 470pfd, 50v (±20%)
5043-09491-00	C2, C29, C30, C34	Capacitor, 22pfd, 1KV, (±10%)
5043-09492-00	C28	Capacitor, 100pfd, 50v, (±10%)
5043-09845-00	C32, C33	Capacitor, 1KP, 50v, (±20%)
5070-08919-00	D2 - D18	Diode, 1N4148, 150MA
5070-09266-00	D1, D25	Diode, 1N5817, 1.0A.
5160-10269-00	Q1	Transistor, 2N3904, NPN
5162-12422-00	U20	IC, ULN, 2803A
5281-09308-00	U3	IC, 74LS245, Octal Bus Tmcv
5281-09486-00	U14	IC, 74LS374, 8D F/F

Part Number	Designator	Description
5281-09851-00	U5	IC, 74LS14, SMT/TRG
5281-09867-00	U1, U2, U7	IC, Octal Buffer, 74LS244
5281-10182-00	U11, U12, U13, U15	IC, 74LS240 Driver
5284-12651-00	U21	IC, 4584
5340-13062-00	U8	IC/RAM 32K x 8
5370-12272-00	U18 - U19	IC, LM339, Quad. Comp
5370-12687-00	U10	MC, 34064 Reset Chip
5520-10438-00	X2	Crystal, 8.0MHz.
5520-12084-00	X1	Crystal 32.768 KHz
5551-09822-00	L1	ILN, 4.7 UH 3A
5671-13732-00	D19 - D21	DSPL LED RED
5700-08985-00	U4	Socket, IC 40P, .6"
5700-12088-00	U6	Socket, IC 32P, .6"
5700-12424-00	U9	Socket, 84 Pin PLCC
5791-10850-00	J201, J204	Connector, 26-pin Header Str Sq.
5791-10862-07	J210	Connector, 7-pin Header Str Sq.
5791-13830-08	J212	Connector, 8-pin Header Str Sq.
5791-13830-09	J206 - J209	Connector, 9-pin Header Sq. pin
5791-13830-12	J205	Connector, 12-pin Header Sq. pin
5791-12516-00	J202, J211	34 Hen 2x17 STR
A-15814	B1 - B3	Battery Holder "AA"
5048-11033-00	C50	Capacitor, 0.022µf, 10v
A-5343-50038-1	U6	Game PROM Assembly
5410-12426-00	U9	WPC-89 ASIC
5400-10320-00	U4	IC MPU 68B09E
5880-09022-00	B1 - B3	Battery, Alkaline, 1.5v ("AA")
5645-09025-00	W11 - W18	Switch Dip 8 Pos

A-12738-50038 WPC Audio Board Assembly

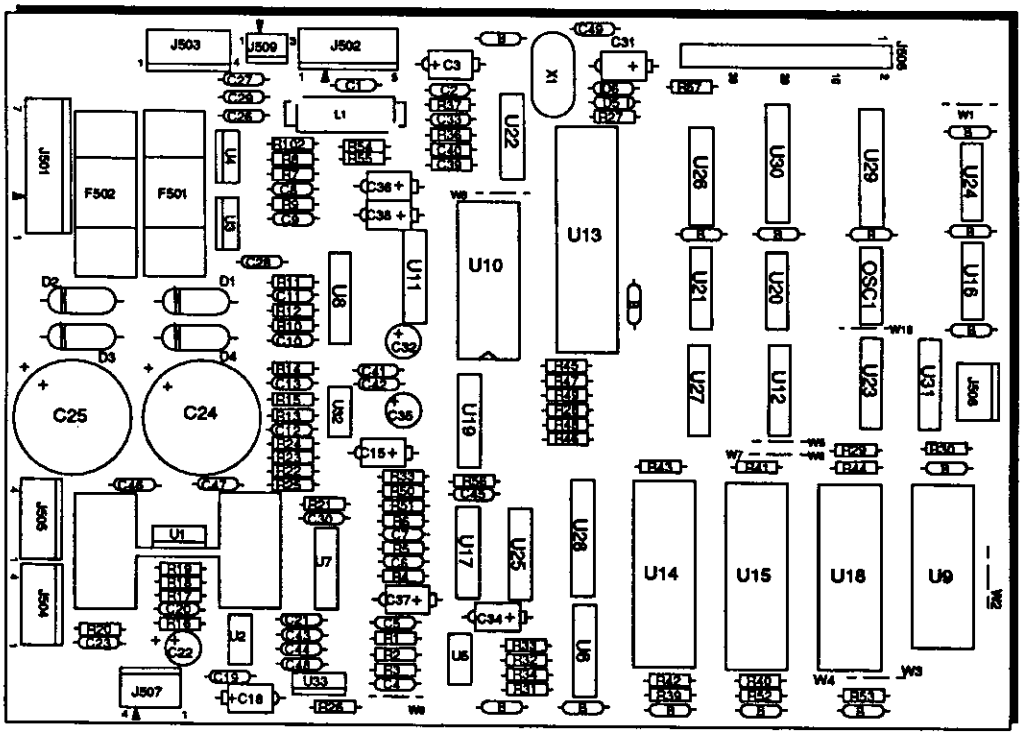

PPart Number	Designator	Description
01-9980		Shield: Wire Protector
4004-01005-06	U1	Mach. Screw, 4-40 x 3/8
4104-01012-04	U1	Sh. Mach. Screw, #4 x 1/4
4404-01119-00	U1	Nut, 4-40 SNUT
5010-08772-00	R21	Resistor, 15KΩ, 1/4w, 5%
5010-12085-00	R22, R25	Resistor, 120KΩ, 1/4w, 5%
5010-08991-00	R51	Resistor, 4.7KΩ, 1/4w, 5%
5010-10987-00	R23, R24	Resistor, 56KΩ, 1/4w, 5%
5010-09034-00	R13, R14, R29-R31, R33, R34, R50, R45-R49	Resistor, 10KΩ, 1/4w, 5%
5010-09035-00	R4	Resistor, 47KΩ, 1/4w, 5%
5010-09036-00	R35	Resistor, 100Ω, 1/4w, 5%
5010-09134-00	R1, R2, R6, R8, R9, R11,R12	Resistor, 150KΩ, 1/4w, 5%
5010-09162-00	R26, R102	Resistor, 100KΩ, 1/4w, 5%
5010-08774-00	R3, R5, R17, R19	Resistor, 22K, 1/4w, 5%
5010-09269-00	R15	Resistor, 12KΩ, 1/4w, 5%
5010-09358-00	R16, R32	Resistor, 1KΩ, 1/4w, 5%
5010-09416-00	R28, R36, R37, R39-R44 R52, R53, R57	Resistor, 470Ω, 1/4w, 5%
5010-09534-00	W3, W5, W7-W10	Resistor, 0Ω
5010-10171-00	R38, R56	Resistor, 56Ω, 1/4w, 5%
5010-10258-00	R16	Resistor, 1M, 1/4w, 5%
5010-10650-00	R7, R10	Resistor, 62K, 1/4w, 5%
5010-10989-00	R54, R55, R27	Resistor, 470K, 1/4w, 5%
5010-12752-00	R20	Resistor, 1Ω, 1/4w, 5%
5040-08996-00	C3	Capacitor, 100M, 10v (±20%)
5040-09332-00	C15, C18, C34, C36, C38	Capacitor, 47µfd., 25v, Axial
5040-11036-00	C32, C35	Capacitor, 47µfd., 16v, Rad
5040-12729-00	C24, C25	Capacitor, 4700µfd., 35v.
5040-12750-00	C22	Capacitor, 22µfd., 35v, Rad.
5041-09031-00	C26-C29, C37, C46-C48	Capacitor, 1µfd. TANT
5041-09243-00	C20, C21	Capacitor, 10µfd. TANT
5043-08980-00	C41-C44, B(14)	Capacitor, .01M, 50v, (+80, -20)
5043-08998-00	C1, C2	Capacitor, .1µfd., 50v, 10%
5048-11027-00	C8, C10	Capacitor, 33pfd., 50v, 10%
5048-11028-00	C45	Capacitor, 22pfd., 50V, Axial
5048-11029-00	C33, C49	Capacitor, 100pfd., 50v
5048-11030-00	C12	Capacitor, 470pfd., 50v
5048-11031-00	C19, C31	Capacitor, .001µfd., 50v, 10%
5048-11065-00	C13	Capacitor, .0022µfd., 50v, 10%, Ax.
5048-11072-00	C39, C40	Capacitor, .0033µfd.
5048-12036-00	C23	Capacitor, .22µfd., 10v, Ceramic
5048-12745-00	C4, C6	Capacitor, 1800pfd., 50V, 10%
5048-12746-00	C5, C7	Capacitor, 330pfd., 50V

Part Number	Designator	Description
5048-12749-00	C9, C11, C30	Capacitor, 220pfd., 50V
5070-08919-00	D5, D6	Diode, 1N4148
5070-09045-00	D1-D4	Diode MR501, 3.0A
5250-10495-00	U3	Reg. 7912 1.0A -12v.
5281-09215-00	U22	IC, 74LS04 Hex INV
5281-09246-00	U12	IC, 74LS139 2-4 Dec.
5281-09486-00	U28-U30	IC, 74LS374 8 Dual Flipflop
5281-09487-00	U6, U23-U25	IC, 74LS74 Dual Flipflop
5281-09500-00	U31	IC, 74LS32
5281-09745-00	U26, U27	IC, 74LS138 DMLTPX
5281-09850-00	U20	IC, 74LS11 Tripple AND
5281-10577-00	U16	IC, 74LS125 Q/B Bfr
5370-11086-00	U10	IC, YM2151 Sound
5371-11087-00	U11	IC, YM3012 D/A
5400-10320-00	U13	IC, MPU 68B09E
5284-12651-00	U21	IC 4584
5340-12278-00	U9	S/Ram 2084
5370-09691-00	U17	IC, 55536 CVSD
5370-12260-00	U2	IC, 3340 Elec Atten
5370-12728-00	U1	IC, Audio Amp LM1875
5370-12730-00	U7, U8	IC, Op Amp TL084
5370-12742-00	U32	IC, Op Amp TL082
5371-12727-00	U19	Dac AD7524
5432-12726-00	U5	EE Prom Pot X9503
5460-12423-00	U4	IC, LM7812
5460-12743-00	U33	LM7809 TO-220
5520-09020-00	X1	Crystal, 3.58 MHz.
5521-10931-00	OSC1	Oscillator, 8.0 MHz.
5551-09822-00	L1	Ind, 4.7UH 3.0A.
5700-08985-00	U13	Socket, IC 40-pin, .6"
5700-09004-00	U10	Socket, IC 24-pin, .6"
5700-09006-00	U11	Socket, IC 16-pin, .3"
A-5343-50038-3	U15	IC, Audio ROM
A-5343-50038-4	U18	IC, Audio ROM
5700-12088-00	U1	Socket, IC 32-pin (U18)
5705-12755-00		Heatsink 52998-220
5731-10356-00	F501, F502	Fuse, 3A, S-B, 250v
5733-12080-01		Fuse Holder (F501, F502)
5791-10862-04	J504, J505	Connector, 4-pin Header Sq. .156
5791-10862-05	J502	Connector, 5-pin Header Sq. .156
5791-10862-07	J501	Connector, 7-pin Header Sq. .156
5791-12462-03	J509	Connector, 3-pin Header Sq. .100
5791-12462-04	J508	Connector, 4-pin Header Sq. .100
5791-12516-00	J506	34 Hen 2x17 STR

A-15028 Flipper Controller Assembly

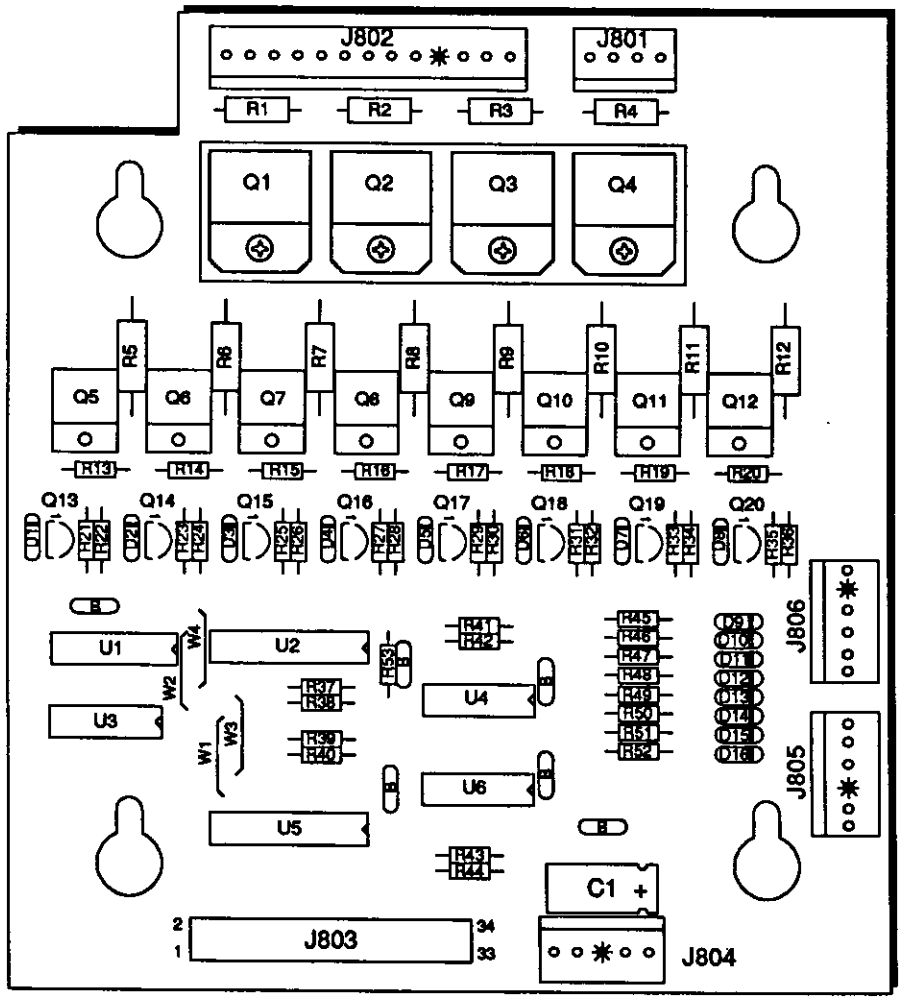

Part Number	Designator	Description
01-10572	Q1-Q4	Heatsink
20-9684	Q5-Q12	Fastener Snap
4006-01003-08	Q1-Q4	Mach. Screw, 6-32
4406-01128-00	Q1-Q4	Nut 6-32 KEPS
5010-09034-00	R37 - R44, R53	Resistor, 10KΩ, 1/4w, 5%
5010-09358-00	R22, R24, R26, R28, R30, R32, R34, R36, R45 - R52	Resistor, 1KΩ, 1/4w, 5%
5010-09361-00	R1 - R4	Resistor, 220Ω, 1/2w, 5%
5010-09416-00	R21, R23, R25, R27, R29, R31, R33, R35	Resistor, 470Ω, 1/4w, 5%
5010-09534-00	W3, W4	Resistor, 0Ω
5010-10171-00	R13 - R20	Resistor, 56Ω, 1/4w, 5%
5011-12956-00	R5 - R12	Resistor, 2.7KΩ, 1w, 5%
5040-08986-00	C1	Capacitor, 100M, 10v

Part Number	Designator	Description
5043-08980-00	B	Capacitor, .01µF, 50v
5070-09054-00	D1 - D16	Diode1N4004
5162-12635-00	Q5-Q12	Transistor TIP102 NPN
5190-09016-00	Q13 - Q20	Transistor 2N4403 PNP
5191-12179-00	Q1-Q4	Transistor TIP36C PNP
5315-12009-00	U2	IC 74HCT374
5315-12031-00	U5	IC 74HCT244
5315-12812-00	U1	IC 74HCT138
5315-12951-00	U3	IC 74HCT00
5370-12272-00	U4, U6	IC LM339 QUAD COMP
5791-10862-04	J801	Connector, 4-pin Header Sq.
5791-10862-05	J804	Connector, 5-pin Headern Sq.
5791-10862-13	J802	Connector, 13-pin Header Sq.
5791-12461-06	J805, J806	Connector, Str Sq. Pin Header
5791-12516-00	J803	34 HEN 2x17 STR

A-14039 Dot Matrix Controller Assembly

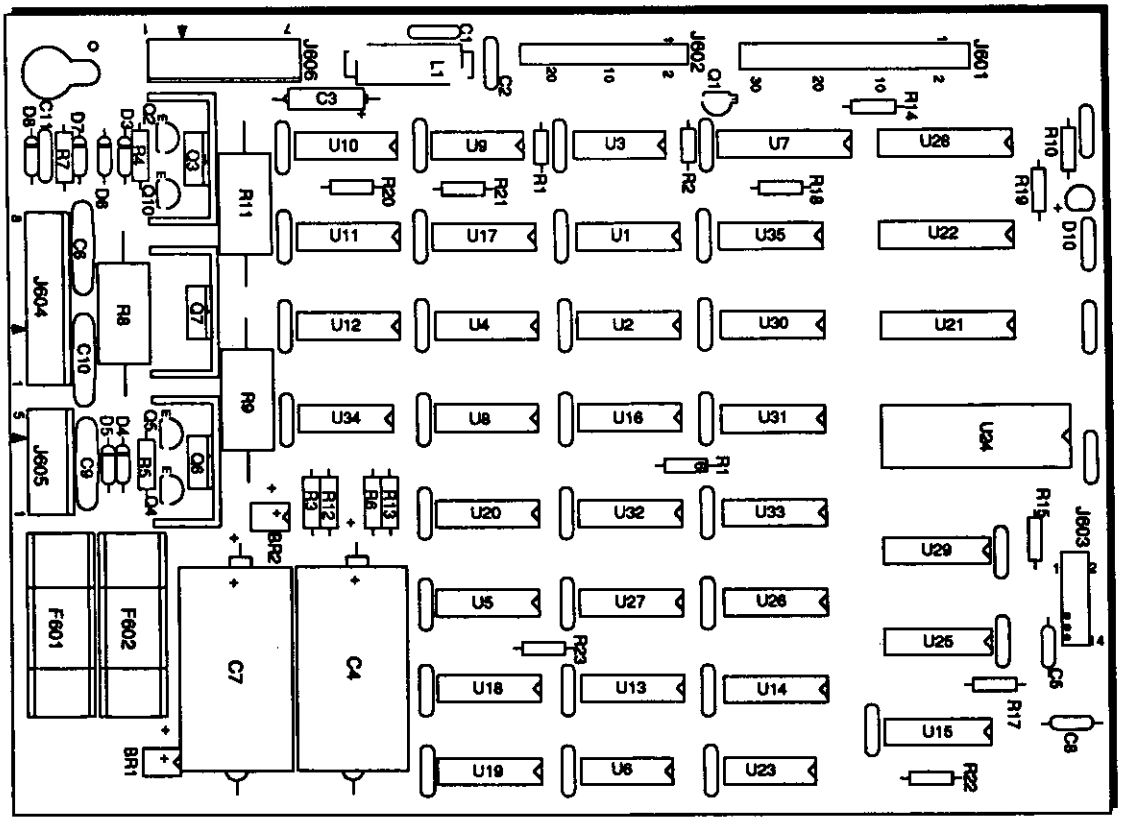

Part Number	Ckt Designator	Description
5010-08991-00	R1	Resistor, 4.7KΩ, 1/4w, 5%
5010-09224-00	R10	Resistor, 270Ω, 1/4w, 5%
5010-12832-00	R3, R6, R12, R13	Resistor, 47KΩ, 1/2w, 5%
5010-12841-00	R4, R5	Resistor, 120Ω, 1/2w, 5%
5012-12830-00	R9	Resistor, 1.8KΩ, 5w, 5%
5012-12842-00	R11	Resistor, 120Ω, 5w, 5%
5012-12843-00	R8	Resistor, 4.7K, 5w, 5%
5010-10171-00	R7	Resistor, 56Ω, 1/4w, 5%
5040-08986-00	C3	Capacitor, 100µfd., 10v, (±20%)
5040-12324-00	C4, C7	Capacitor, 150µfd., 160v, (±50%)
5043-08980-00	BYPASS	Capacitor, .01µfd., 50v, (+80, -20%)
5043-09072-00	C6, C9, C10	Capacitor, .1µfd., 500v, (+80, -20%)
5043-09845-00	C1, C2, C11	Capacitor, 1KP, 50v, (±20%)
5043-09492-00	C5, C8	Capacitor, 100P, 50v, (±10%)
5070-09054-00	D7	Diode, 1N4004, 1.0A.
5075-12824-00	D6, D8	Zener, 1N4742A, 12v
5075-12823-00	D4, D5	Zener, 1N4758A, 56v
5075-12826-00	D3	Zener, 1N4759A, 62v
5100-12833-00	BR1, BR2	Bridge, 400v, 1A.
5160-10269-00	Q1	Transistor, 2N3904 NPN
5164-09056-00	Q2, Q10	Transistor, MPSD02, NPN
5164-12154-00	Q3, Q7	Transistor, MJE15030 NPN
5194-09055-00	Q4, Q5	Transistor, MPSD52 PNP
5194-12155-00	Q6	Transistor, MJE15031 PNP
5281-09736-00	U16, U25 - U27	IC, 74LS157
5281-10033-00	U3	IC, 74LS30
5281-10043-00	U31 - U33, U35	IC, 74LS175
5311-10946-00	U4, U5, U17, U18, U20	IC, 74HC74

Part Number	Ckt Designator	Description
5311-10947-00	U9	IC, 74HC125
5311-10951-00	U10, U11	IC, 74HC161
5311-10977-00	U6	IC, 74HC04
5311-12817-00	U29	IC, 74HC165
5311-12819-00	U21	IC, 74HC688
5311-12820-00	U23	IC, 74HC27
5311-12822-00	U13 - U15	IC, 74HC193
5315-12009-00	U22	IC, 74HCT374
5315-12812-00	U1, U2, U30	IC, 74HCT138
5281-09308-00	U28	IC, 74HCT245
5315-12815-00	U8, U34	IC, 74HCT08
5315-12816-00	U19	IC, 74HCT32
5315-12821-00	U7	IC, 74HCT240
5340-12278-00	U24	S/RAM 2064 150NS
5551-09822-00	L1	IND 4.7µH, 3.0A.
5671-13732-00	D10	Display LED Red
5705-09199-00	Q3, Q6, Q7	Heatsink 6030B
5731-12328-00	F601, F602	Fuse, 3/8A.,SB, 250v
5733-12060-00		Fuse Holder (F601, F602)
5791-10850-00	J602	Connector, 26-pin STR Sq.
5791-10862-05	J605	Connector, 5-pin Header S
5791-10862-07	J606	Connector, 7-pin Header S
5791-10862-08	J604	Connector, 8-pin Header S
5791-12516-00	J601	34 Hen 17x2 STR
5791-12827-00	J603	14 Hen 7x2 STR
5010-09036-00	R14-R23	Resistor, 100Ω, 1/4w, 5%
4006-01003-06	Q3, Q6, Q7	Mach. Screw, 6-32 x 3/8
4406-01128-00	Q3, Q6, Q7	Nut, 6-32 KEPS

A-12697-3 WPC Power Driver Assembly

Part Number	Ckt Desionator	Description
4006-01005-06	Q1, Q2	Mach. Screw, 6-32 x 3/8
4406-01128-00	Q1, Q2	Nut, 6-32 KEPS
4004-01005-06	Q10, Q12, Q14, Q16, Q18	Mach. Screw, 4-40 x 3/8
4404-01119-00	Q10, Q12, Q14, Q16, Q18	Nut, 4-40 SNUT
5010-08981-00	R260	Resistor, 10KΩ, 1/2w, 5%
5010-08991-00	R9, R12, R15, R18, R21, R23, R27, R31, R35, R39, R43, R47, R51, R55, R59, R63, R67, R71, R75, R79, R83, R87, R91, R95, R99, R126, R128, R130, R132, R134, R136, R138, R140, R227	Resistor, 4.7KΩ, 14w, 5%
5010-08992-00	R8, R11, R14, R17, R20, R177, R179, R181, R183, R185, R187, R189, R191	Resistor, 560Ω, 1/4w, 5%
5010-08993-00	R25, R29, R33, R37, R41, R45, R49, R53, R57, R61, R65, R69, R73, R77, R81, R85, R89, R93, R97, R101, R103, R108, R109, R112, R115, R118, R121, R124	Resistor, 68Ω, 1/4w, 5%
5010-08997-00	R24, R28, R32, R36, R40, R44, R48, R52, R56, R60, R64, R68, R72, R76, R80, R84, R88, R92, R96, R100, R102, R105, R108, R111, R114, R117, R120, R123, R195	Resistor, 2.7KΩ, 1/4w, 5%
5010-08998-00	R155, R157, R159, R161, R165, R167, R169, R171	Resistor, 2.2KΩ, 1/4w, 5%
5010-09034-00	R3, R4, R6, R142-R149, R197, R198	Resistor, 10KΩ, 1/4w, 5%
5010-09085-00	R194, R196, R251, R253-R257	Resistor, 1.5KΩ, 1/4w, 5%
5010-09086-00	R252	Resistor, 6.8KΩ, 1/4w, 5%
5010-09224-00	R1, R2, R192, R201, R205, R208	Resistor, 270Ω, 1/4w, 5%
5010-09314-00	R176, R178, R180, R182 R184, R186, R188, R190	Resistor, 1.2KΩ, 1/4w, 5%
5010-09324-00	R206	Resistor, 27KΩ, 1/4w, 5%
5010-09358-00	R154, R156, R158, R160, R164, R166, R168, R170, R162, R193, R199, R200 R250	Resistor, 1KΩ, 1/4w, 5%
5010-09361-00	R104, R107, R110, R113 R116, R119, R122, R125	Resistor, 220Ω, 1/4w, 5%
5010-09416-00	R22, R26, R30, R34, R38, R42, R46, R50, R54, R58, R62, R66, R70, R74, R78, R82, R86, R90, R94, R98, R127, R129, R131, R133, R135, R137, R139, R141	Resistor, 470Ω, 1/4w, 5%
5010-09534-00	W1, W2	Resistor, 0Ω
5010-11079-00	R7, R10, R13, R16, R19	Resistor, 51Ω, 1/4w, 5%
5010-12427-00	R150-R153, R172-R175	Resistor, .22Ω, 1w, 5%
5012-12632-00	R224	Resistor, .12Ω, 10w, 5%
5019-10143-00	SR1	SIP, 9R, 10 pin, 470Ω, 5%
5040-08986-00	C4	Capacitor, 100µfd, 10v (±20%)
5040-09421-00	C2	Capacitor, 100µfd, 25v (+50, -10%)
5040-09537-00	C8	Capacitor, 100µfd, 100v (±20%)

Part Number	Ckt Desionator	Description
5040-12313-00	C5, C6, C7, C11, C30	Capacitor, 15,000µfd, 25v (±20%)
5043-08980-00	B-BYPASS	Capacitor, .01µfd, 50v (+80, -20%)
5043-08998-00	C13-C20, C31	Capacitor, .1µfd, 50v (±20%)
5043-09845-00	C1, C12	Capacitor, 1,000pfd, 50v (±20%)
5048-10994-00	C3	Capacitor, .33µfd, 50v (±20%) Ax.
5070-08919-00	D33, D34	Diode, 1N4148, 150MA.
5070-09054-00	D1-D3, D5-D12, D17-D32, D38	Diode, 1N4004, 1.0A.
5100-09690-00	BR1-BR5	Bridge Rectifier, 35A., 200v
5131-12725-00	Q10, Q12, Q14, Q16, Q18	Triac, BT138E
5162-12422-00	U19	IC, ULN 2803
5162-12635-00	Q20, Q22, Q24, Q26, Q28 Q30, Q32, Q34, Q36, Q38, Q40, Q42, Q44, Q46, Q48, Q50, Q52, Q54, Q56, Q58, Q63, Q65, Q67, Q69, Q75, Q77, Q79, Q81, Q83 - Q90	Transistor, TIP 102
5194-09055-00	Q9, Q11, Q13, Q15, Q17, Q19, Q21, Q23, Q25, Q27, Q29, Q31, Q33, Q35, Q37, Q39, Q41, Q43, Q45, Q47, Q49, Q51, Q53, Q55, Q57, Q59-Q62, Q71-Q74	Transistor, 2N5401 PNP
5191-12179-00	Q64, Q66, Q68, Q70, Q76 Q78, Q80, Q82	Transistor, TIP36C PNP
5192-12428-00	Q91-Q96	Transistor, TIP 107
5250-12634-00	Q1	Reg LM 323 5v
5281-09486-00	U1-U5, U16	IC, 74LS374 8 Dual D Flipflop
5281-09487-00	U10-U13	IC, 74LS74 Dual D flipflop
5281-10182-00	U9	IC, 74LS240, L/Drvr
5370-12272-00	U6, U15, U16	IC, LM339 Quad. Comp
5460-12423-00	Q2	IC, LM 7812
5671-13732-00	LED1 - LED7	Display LED Red
5701-09652-00	Q1	Thermal Pad TO-3
5705-09199-00	Q2	Heatsink, #6030B
5705-12637-00	Q1	Heatsink 5054
5705-12638-00	Q10, Q12, Q14, Q16, Q18	Heatsink 5298B
5733-12060-01		Fuse Holder, F101-F116
5791-10862-03	J109, J119, J136	Connector, 3-pin Header STR Sq.
5791-10862-04	J103, J116-J118	Connector, 4-pin Header STR Sq.
5791-10862-05	J112, J104-J106, J123, J124, J128, J129, J131, J132	Connector, 5-pin Header STR Sq.
5791-10862-06	J107	Connector, 6-pin Header STR Sq.
5791-10862-07	J101, J109, J114	Connector, 7-pin Header STR Sq.
5791-10862-09	J102, J122, J125, J127, J130, J137, J138	Connector, 9-pin Header STR Sq.
5791-10862-11	J120, J121	Connector, 11-pin Header STR Sq.
5791-10862-12	J115	Connector, 12-pin Header STR Sq.
5791-10862-13	J126	Connector, 13-pin Header STR Sq.
5791-13830-05	J111	Connector, 5-pin Header STR Sq.
5791-13830-09	J133-J135	Connector, 9-pin Header STR Sq.
5791-12516-00	J113	34 HEN 2x17 STR
5824-09248-00	TP1-TP8	Test Point #1502-1
5041-09163-00	C9	Capacitor, 2.2µfd TANT
5730-09071-00	F114	Fuse, 8A, 32v
5731-09432-00	F112	Fuse, S-B, 7A., 250v
5731-09651-00	F106 - F111, F113	Fuse, S-B, 5A., 250v
5731-10356-00	F101 - F105, F116	Fuse, S-B, 3A., 250v
5730-09797-00	F115	Fuse, S-B, 3/4A., 250v
5705-12698-00		Heatsink #62365
4010-01006-00		Mach. Screw, 10-32 x 5/8

A-12697-3 WPC Power Driver Assembly

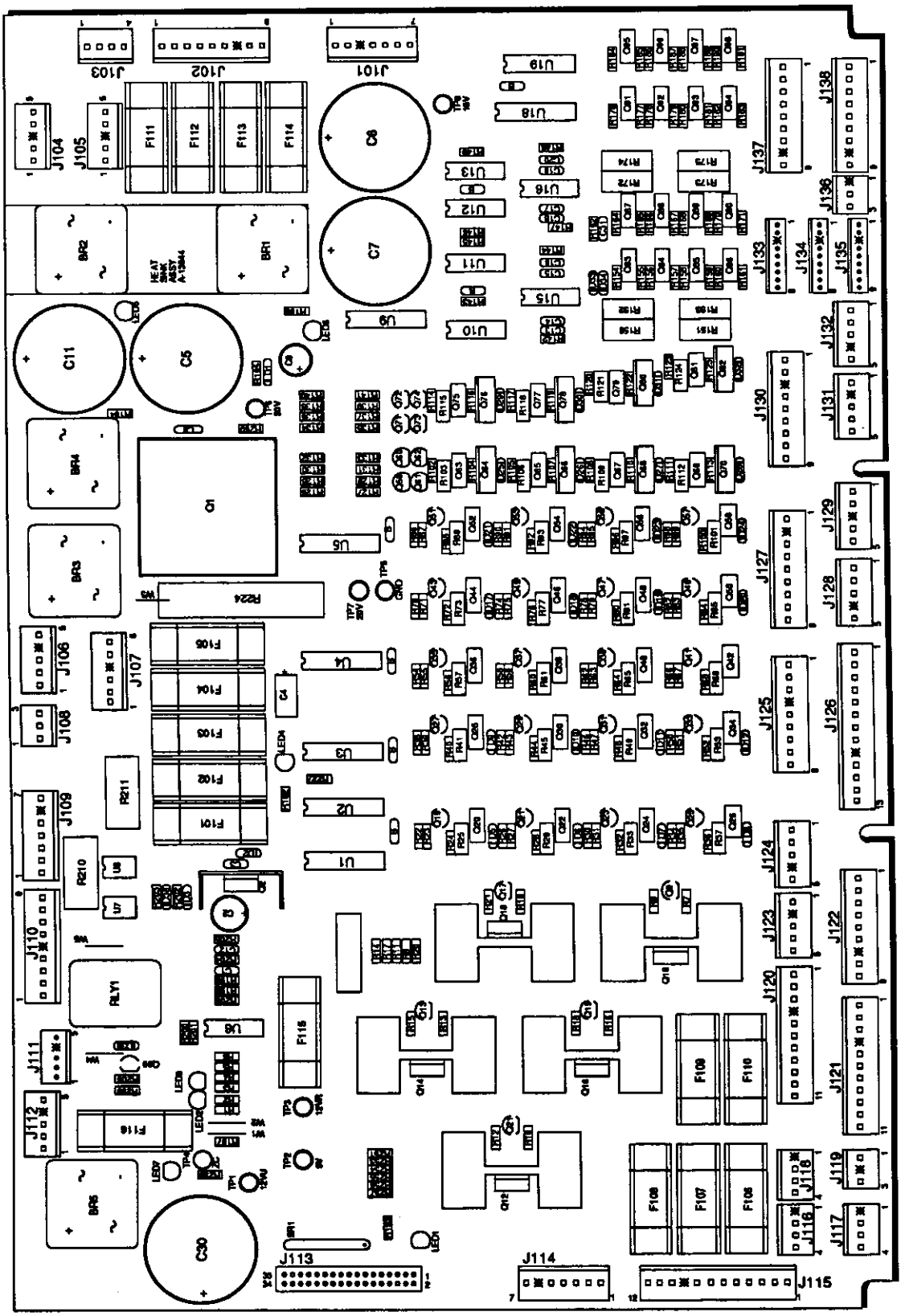

A-15416
Extra Flipper Supply Board

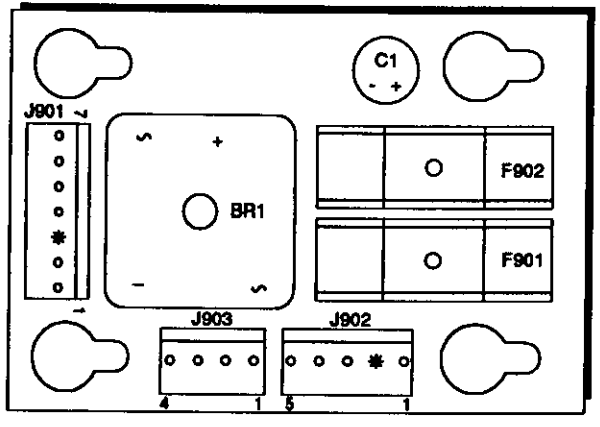

Part Number	Designator	Description
5791-10862-05	J902	Connector, 5-pin Header
5791-10862-04	J903	Connector, 4-pin Header
5791-10862-07	J901	Connector, 7-pin Header
5100-09690-00	BR1	Bridge Rectifier
5733-12060-01	-	Fuse Holder (F901, F902)
5731-10356-00	F901, F902	Fuse, S-B, 3A., 250v

A-14689-1
WPC Coin Door Interface Board

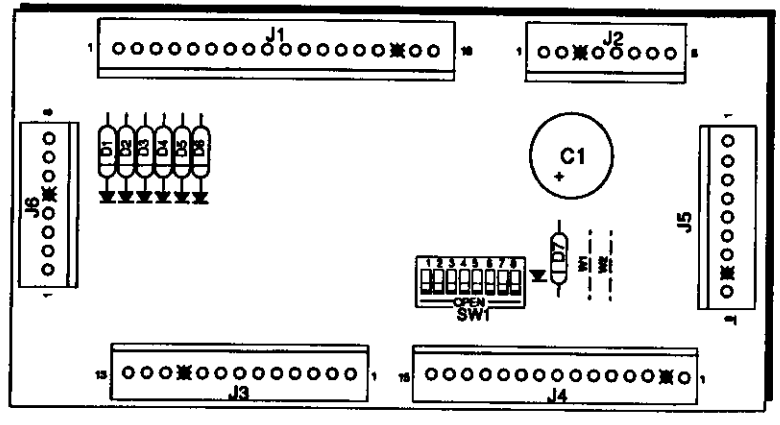

Part Number	Designator	Description
5070-09054-00	D1-D7	Diode, 1N4004, 1.0A.
5791-10862-18	J1	Connector, 18-pin Header Str Sq.
5791-10862-08	J2, J6	Connector, 8-pin Header Str Sq.
5791-10862-13	J3	Connector, 13-pin Header Str Sq.
5791-10862-15	J4	Connector, 15-pin Header Str Sq.
5010-09534-00	W2	Resistor, 0Ω (Jumper)
5645-09025-00	SW1	Switch DIP 8-Position

A-15340
Motor EMI Board

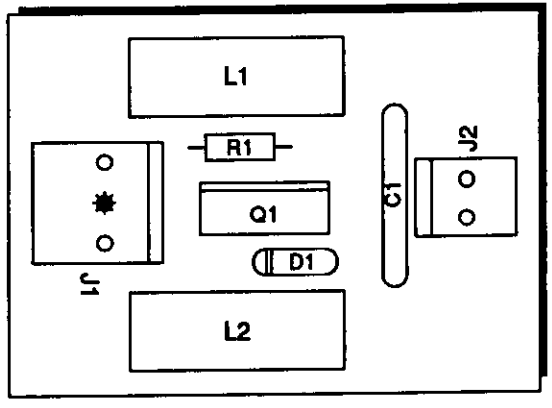

Part Number	Designator	Description
5551-09822-00	L1, L2	Ind. 4.7MH3AMP
5791-12273-03	J1	Connector, 3-pin Header Sq.
5791-12273-02	J2	Connector, 2-pin Header Sq.
5010-08998-00	R1	Resistor, 2.2KΩ, 1/4w, 5%
5070-09054-00	D1	Diode 1N4004, 1.0A.
5162-12635-00	Q1	Transistor TIP 102

A-15139
High Power Board

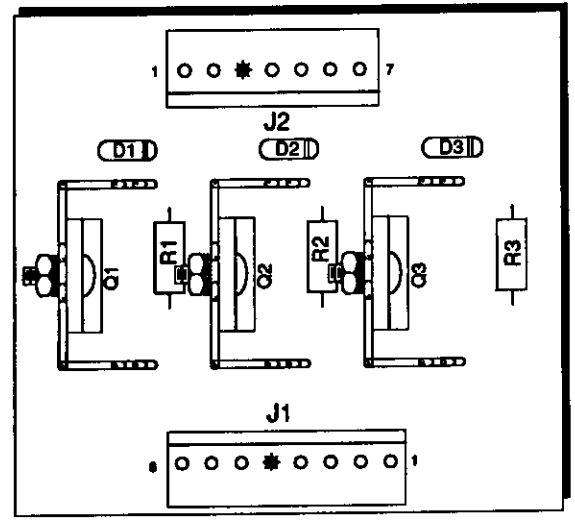

Part Number	Designator	Description
5705-09199-00	-	Heatsink 6030B
5791-10862-08	J1	Connector, 8-pin Header
5791-10862-07	J2	Connector, 7-pin Header
5010-09361-00	R1-R3	Resistor, 220Ω, 1/2w, 5%
5070-09054-00	D1-D3	Diode 1N4004 1.0A.
4006-01003-06	-	Mach. Screw, #6-32 x 3/8 P-PH
4406-01128-00	-	Nut 6-32 KEPS
5191-12179-00	Q1-Q3	Trans. TIP 36C PNP

A-15285
2-Opto Switch Assembly

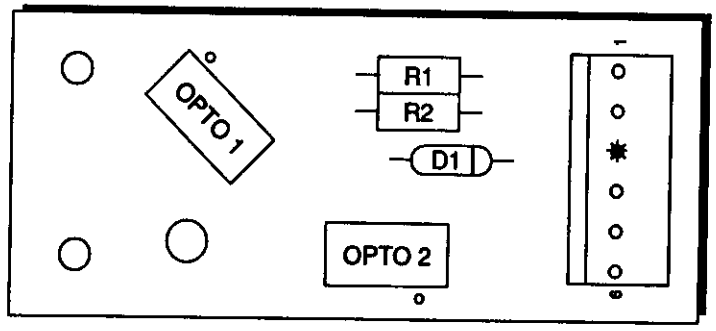

Part Number	Designator	Description
5070-09054-00	D1	Diode 1N4004 1.0A.
5010-08930-00	R1, R2	Resistor, 470Ω, 1/2w, 5%
5490-12451-00	OPTO1, OPTO2	Opto Inter Lg 10MA
5791-10862-06		Connector, 6-pin Header

C-13940
5-Switch & Diode Board

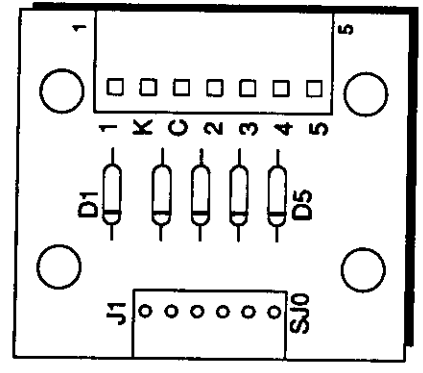

Part Number	Designator	Description
5070-09054-00	D1 - D5	Diode 1N4004, 1.0A.
5791-10862-07	J2	Connector, 7-pin Header Sq.
5791-12462-06	J1	Connector, 6-pin Header Sq.

A-15576
7-Switch Opto PCB Assembly

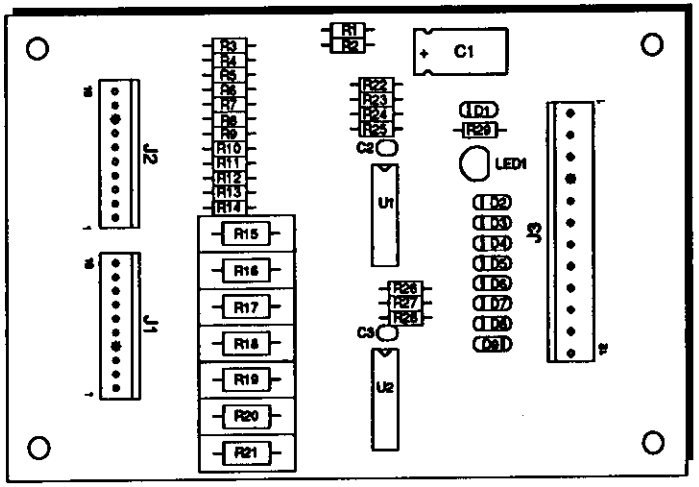

Part Number	Designator	Description
5040-12298-00	C1	Cap., 100µfd, 40v (±50%)
5043-08980-00	C2, C3	Capacitor, .01 M 50v
5671-09019-00	LED 1	Display LED Red
5370-12272-00	U1, U2	IC LM339 Quad.
5070-09054-00	D1 - D9	Diode 1N4004 1.0A.
5010-12928-00	R15 - R21	Resistor, 270KΩ, 2w, 5%
5010-09999-00	R1 - R14	Resistor, 2KΩ, 2w, 5%
5010-10631-00	R29	Resistor, 1.2KΩ, 2w, 5%
5010-09162-00	R23, R25, R26	Resistor, 100KΩ, 2w, 5%
5010-08774-00	R22, R24	Resistor, 22KΩ, 1/4w, 5%
5010-09034-00	R28	Resistor, 10KΩ, 1/4w, 5%
5791-10862-12	J3	Connector, 12-pin Header Str Sq.
5791-12462-10	J1, J2	Connector, 10-pin Header Str Sq.

A-17316
Flipper Opto PCB Assembly

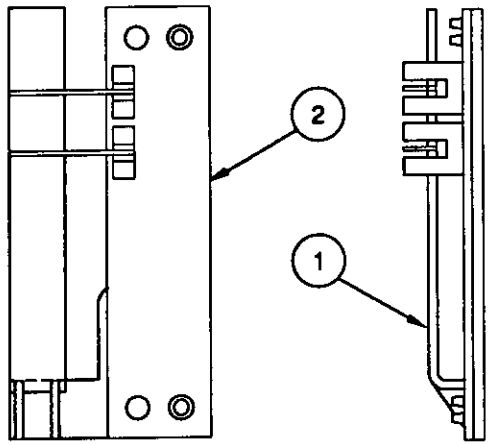

Item	Part Number	Description
1.	03-9001	Interrupter Flip-Opto
2.	A-16384	Flipper Opto Switch Assembly
	5010-08930-00	Resistor, 470Ω, 1/2w, 5%
	5490-12451-00	Opto Inter Lg. 10mA.
	5791-12462-07	Connector, 7-pin Header

A-15849-R-6 Flipper Assembly - Lower Right
A-15849-L-6 Flipper Assembly - Lower Left

Item	Part Number	Description
1.	B-13104-R	Flipper Base Assy., Right
	B-13104-L	***Flipper Base Assy., Left***
2.	SW-1A-194	Switch Assembly
3.	4701-00002-00	Lockwasher, #6 Split
4.	4105-01019-10	Sh. Metal Screw, #5 x 5/8 P-RH-A
5.	4008-01079-05	Mach. Screw, 8-32 x 5/16 H-SOC
6.	4701-00003-00	Lockwasher, #8 Split
7.	01-9375	Switch Mounting Bracket
8.	20-6516	Speednut, Tinnerman
9.	4010-01066-06	Cap Screw, 10-32 x 3/8, SH
10.	4701-00004-00	Lockwasher, #10 Split
11.	A-12390	Flipper Stop Assembly
12.	FL-15411	Flipper Coil (Orange)
a)	03-7066-5	Coil Tubing
13.	01-7695	Solenoid Bracket
14.	4006-01017-04	Mach. Screw, 6-32 x 1/4 P-RH-S
15.	10-364	Spring
16.	A-15848-R	Crank Link Assembly, Right
	A-15848-L	***Crank Link Assembly, Left***
a)	A-17050-R	Flipper Crank Assembly, Right
	A-17050-L	***Flipper Crank Assembly, Left***
b)	A-15847	Flipper Link Assembly
c)	02-4676	Link Spacer Bushing
d)	4010-01086-14	Cap Screw, 10-32 x 7/8 SH
e)	4700-00023-00	Flatwasher, 5/8 x 13/64 x 16ga.
f)	4701-00004-00	Lockwasher #10 Split
g)	4410-01132-00	Nut, 10-32 ESN
17.	23-6577	Bumper Plug, 5/8"
18.	03-7568	Flipper Bushing
19.	4006-01005-06	Mach. Screw, 6-32 x 3/8 P-PH
20.	4406-01117-00	Nut, 6-32 Hex

■ **Associated Parts for Left & Right Flippers:**

21.	23-6519-4	Flipper Rubber Ring, Red (3 used)
22.	20-9250-6	Flipper & Shaft, Yellow (3 used)

A-15849-R
Flipper Assembly - Upper Right
(Parts listed replace same items of **A-15849-R-6**)

Item	Part Number	Description
12.	FL-17630	Flipper Coil (Red)

A-15849-L-1
Flipper Assembly - Upper Left
(Parts listed replace same items of **A-15849-L-6**)

Item	Part Number	Description
12.	FL-11753	Flipper Coil (Yellow)

■ **Associated Parts:**

21.	23-6553-4	Small Flipper Rubber Ring, Red
22.	20-9264-6	Small Flipper & Shaft

Flipper Assembly

A-15849-L-6 Lower Left Flipper

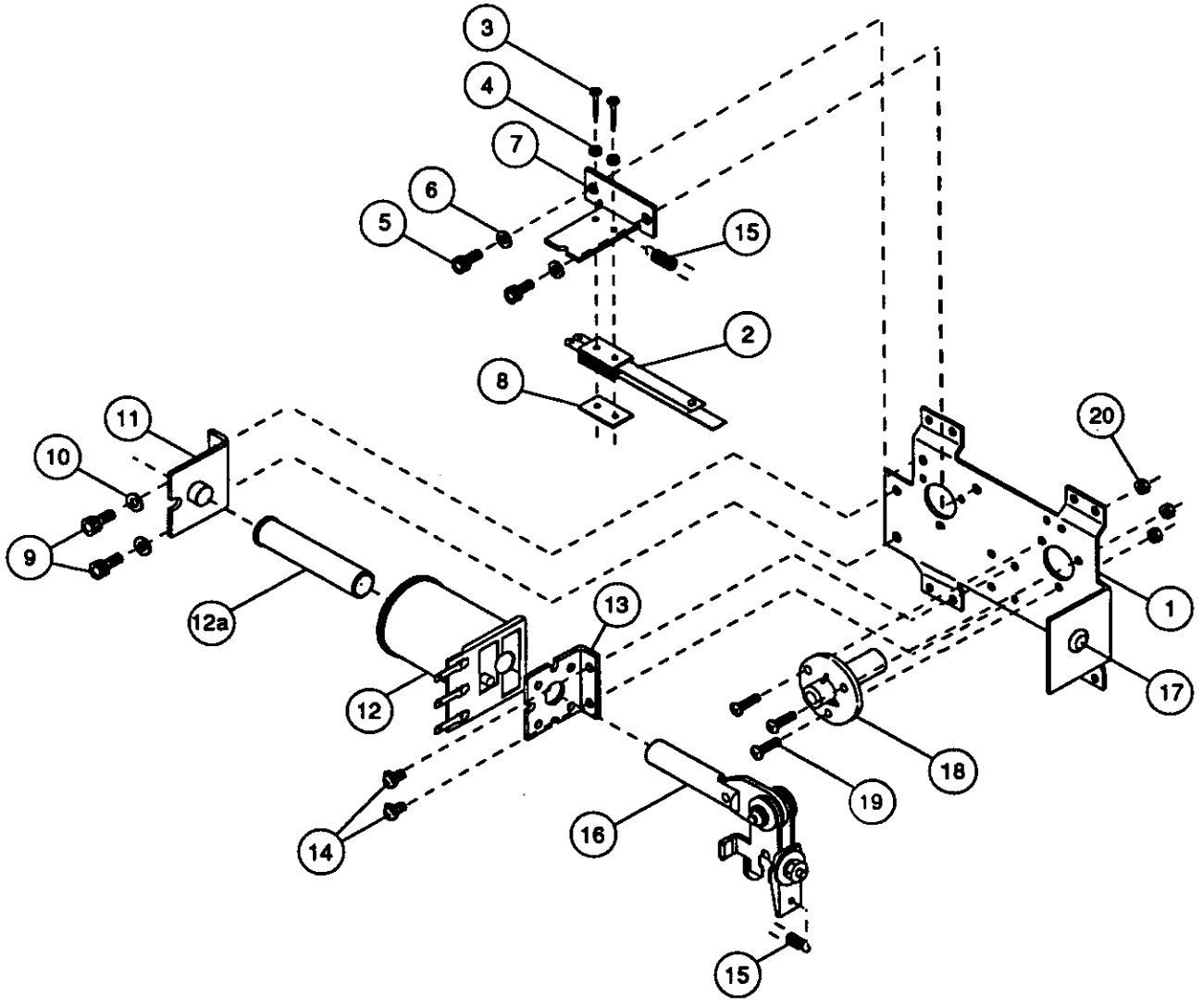

■ **Flipper Notes:**

1. Each Flipper Assembly is mounted beneath the playfield, in conjuction with the Plastic Flipper & Shaft, and Flipper Rubber on the upper side of the playfield.
2. With the flipper, in the non-activated position, the E.O.S. Switch contacts must have a gap of .062 (±.015) inch. When flipper is activated switch must close.
3. Any adjustment of the E.O.S. Switch must be made at a minimum distance of 0.25 inch from the switch body.
4. Longer blade of E.O.S. Switch must be straight. Gap adjustment is done by adjusting shorter blade.
5. All moving elements of the assembly must operate freely without any evidence of binding.
6. Apply Loctite™ 245 when reatacching screws to the Flipper Stop Assembly, the Solenoid Bracket, and the Flipper Bushing.

A-8039-3 Outhole Kicker Assembly

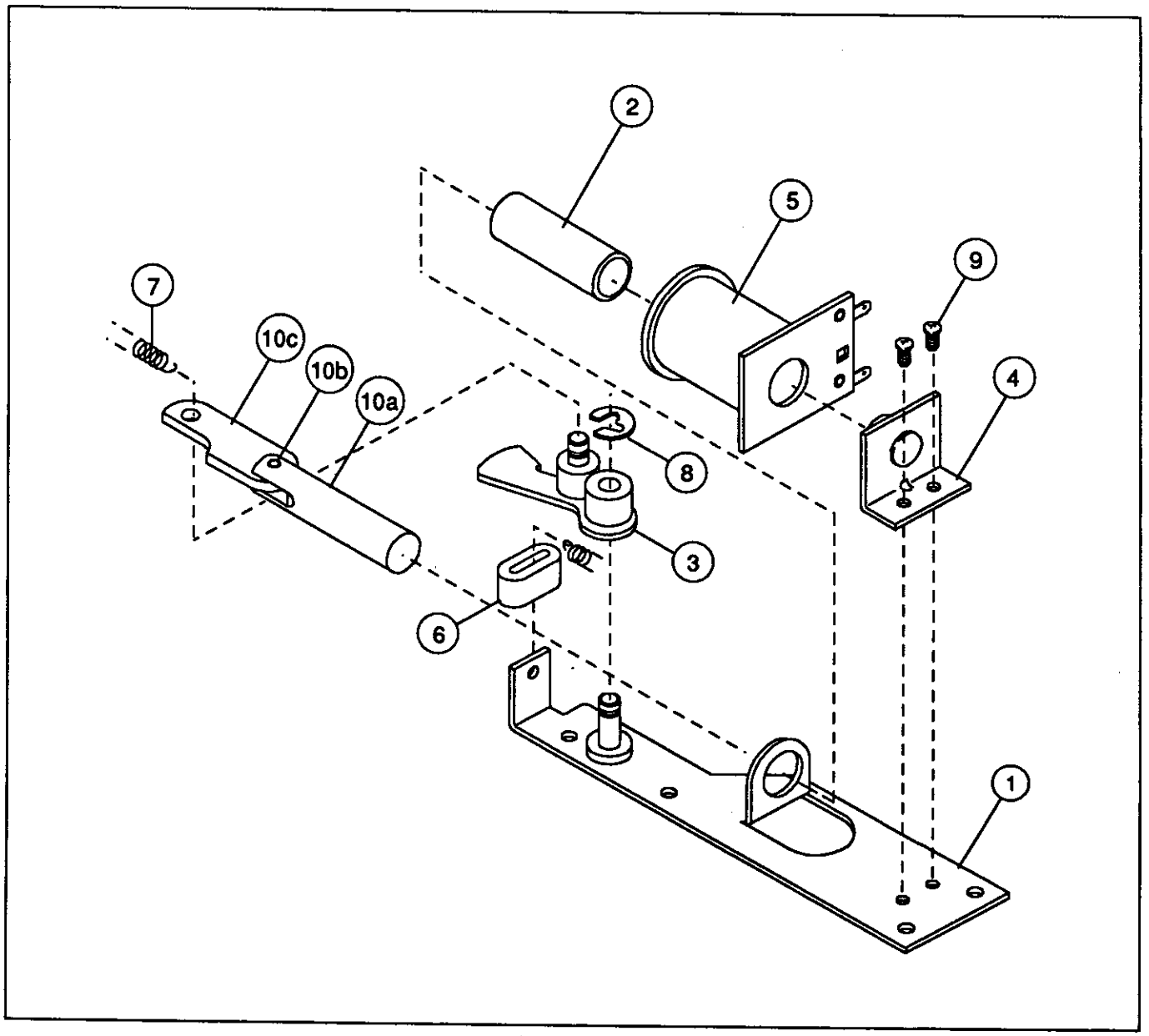

Item	Part Number	Description
1.	A-6378	Mounting Plate Assembly
2.	03-7066	Coil Tubing
3.	A-6889	Kicker Lever Assembly
4.	A-8038	Coil Stop Assembly
5.	AE-27-1200	Coil Assembly
6.	03-7176-1	Striker Ring
7.	10-101-4	Spring-Reset
8.	20-8712-25	"E" Ring, 1/4" Shaft
9.	4006-01003-03	Mach. Screw, 6-32 x 3/16"
10.	A-8335	Coil Plunger Assembly
a)	02-2364	Coil Plunger
b)	20-8716-5	Roll Pin, 1/8 x 7/16"
c)	01-4251	Ball Return Link

C-9638 Ball Shooter Lane Feeder Assembly

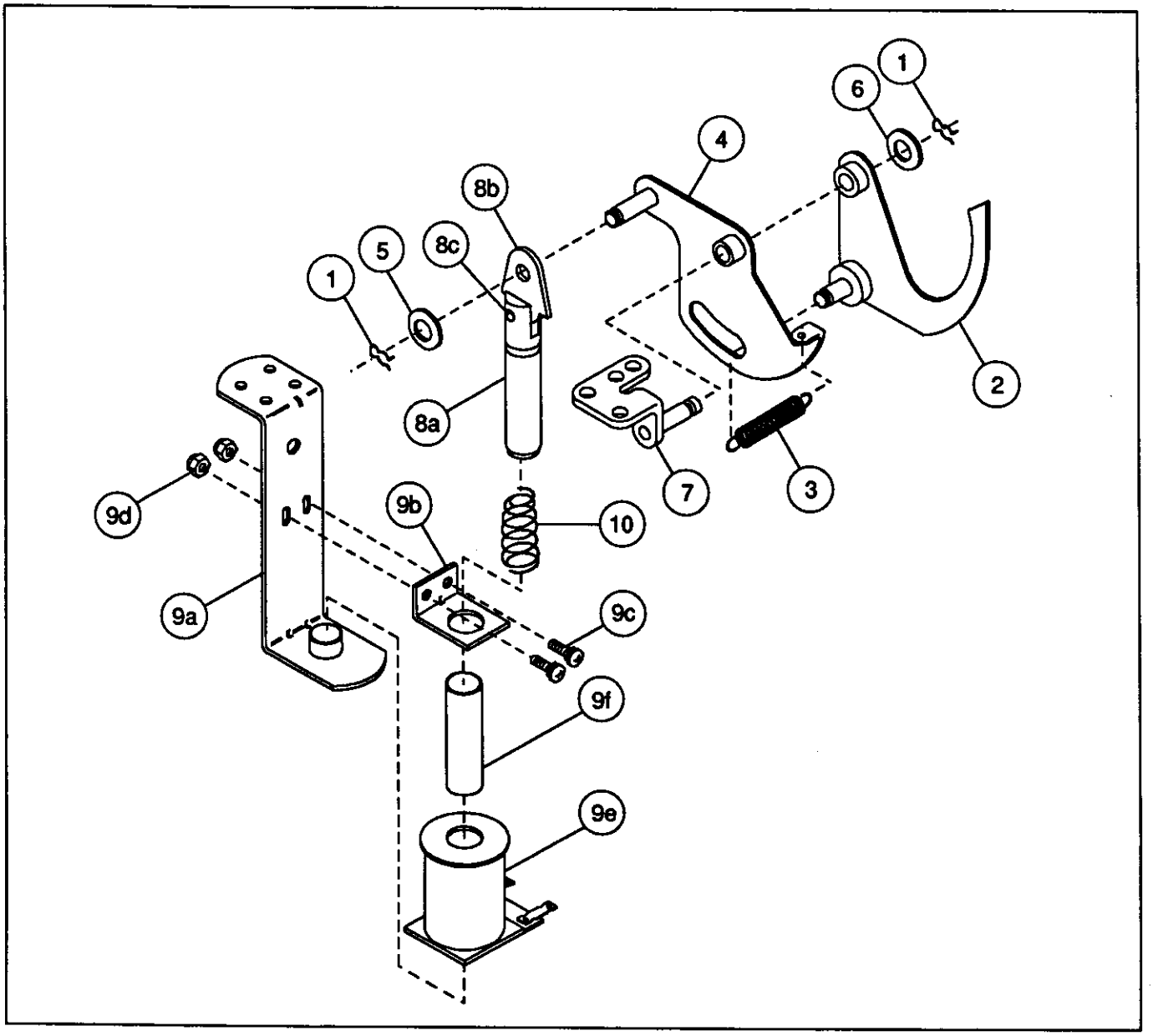

Item	Part Number	Description
1.	12-6227	Hairpin Clip
2.	A-8247	Eject Cam Assembly
3.	10-362	Ejector Spring (Plain)
4.	A-6949-L	Spring Plate Assembly
5.	4700-00030-00	Flatwasher, 17/64 x1/2 x 15ga.
6.	4700-00103-00	Flatwasher, 17/64 x1/2 x 28ga.
7.	A-8268	Mounting Bracket Assembly
8.	A-8050-1	Coil Plunger Assembly
a)	02-3407-2	Coil Plunger Assy, 2-1/8"
b)	03-8085	Armature Link
c)	20-8716-5	Roll Pin, 1/8 x 7/16"

■ **Associated Parts:**

Item	Part Number	Description
9.	B-9362-L-2	Coil & Bracket Assembly
a)	B-7572-1	Bracket & Stop Assembly
b)	01-8-508-S	Coil Retaining Bracket
c)	4006-01017-06	Mach. Screw, 6-32 x 3/8
d)	4406-01119-00	Nut, 6-32 ESN
e)	AE-26-1200	Coil Assembly
f)	03-7066	Coil Tubing
10.	10-128	Spring

B-9414-3
Jet Bumper Assembly

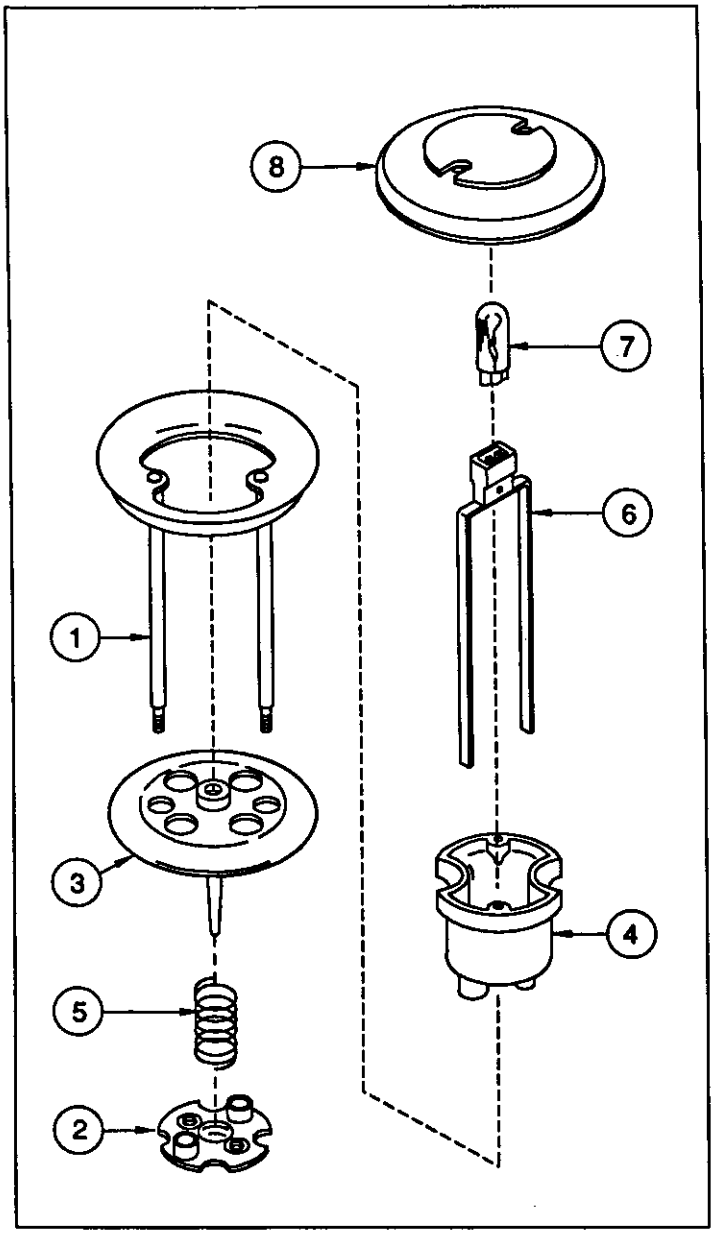

Item	Part Number	Description
1.	A-4754	Bumper Ring Assembly
2.	03-6009-A5	Bumper Base, White
3.	03-6035-4	Bumper Wafer, Red
4.	03-7443-5	Bumper Body, White
5.	10-7	Spring
6.	24-8776	Socket - Wedge Base
7.	24-8768	Bulb #555 (6.3V., 0.25A.)

■ **Associated Parts:**

8.	03-8254-8	Jet Bumper Cap, Amber
	03-8254-9	Jet Bumper Cap, Red
	03-8254-16	Jet Bumper Cap, Yellow
	03-8254-28	Jet Bumper Cap, Op. Gold
	03-8651-13	Jet Bumper Cap, Tr. Clear

A-9415-2
Jet Bumper Coil Assembly

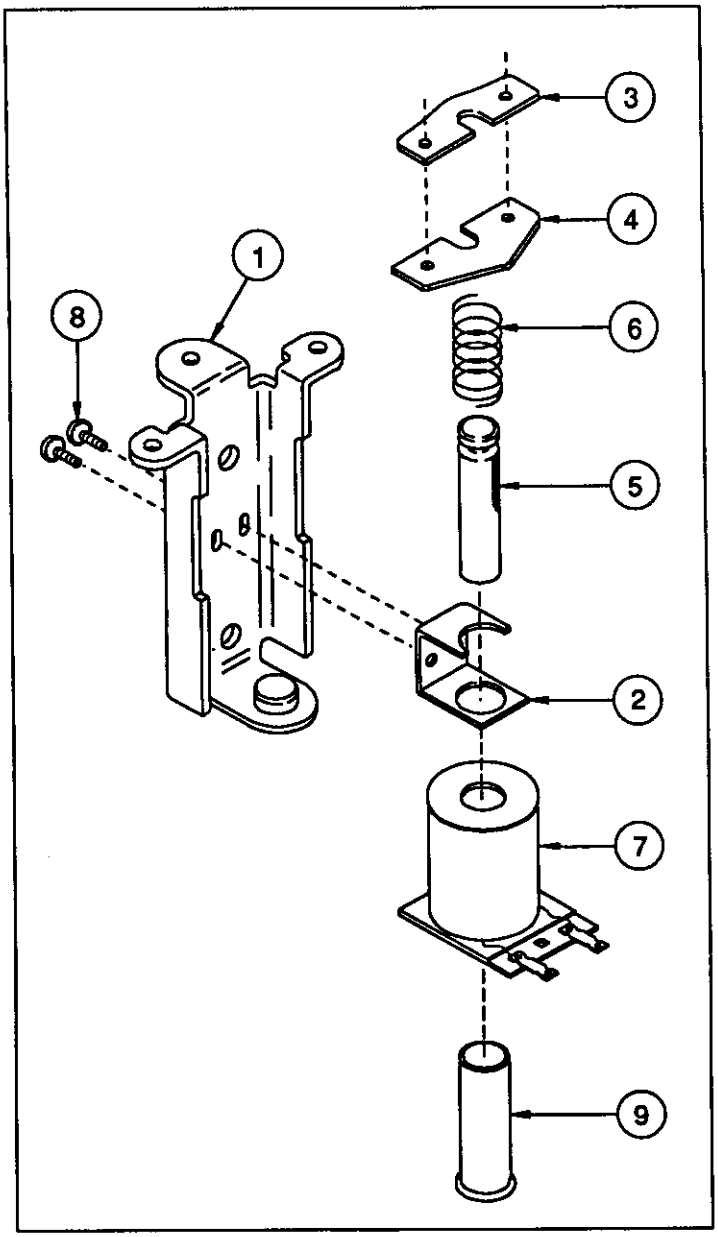

Item	Part Number	Description
1.	B-7417	Bracket & Stop Assembly
2.	01-1747	Coil Retaining Bracket
3.	01-5492	Armature Link, Steel
4.	01-5493	Armature Link, Bakelite
5.	02-3406-1	Coil Plunger
6.	10-326	Armature Spring
7.	AE-26-1200	Coil Assembly
8.	4006-01017-04	Mach. Screw, 6-32 x 1/4"
9.	03-7066	Coil Tubing

B-12665 Kicker Arm (Slingshot) Assembly

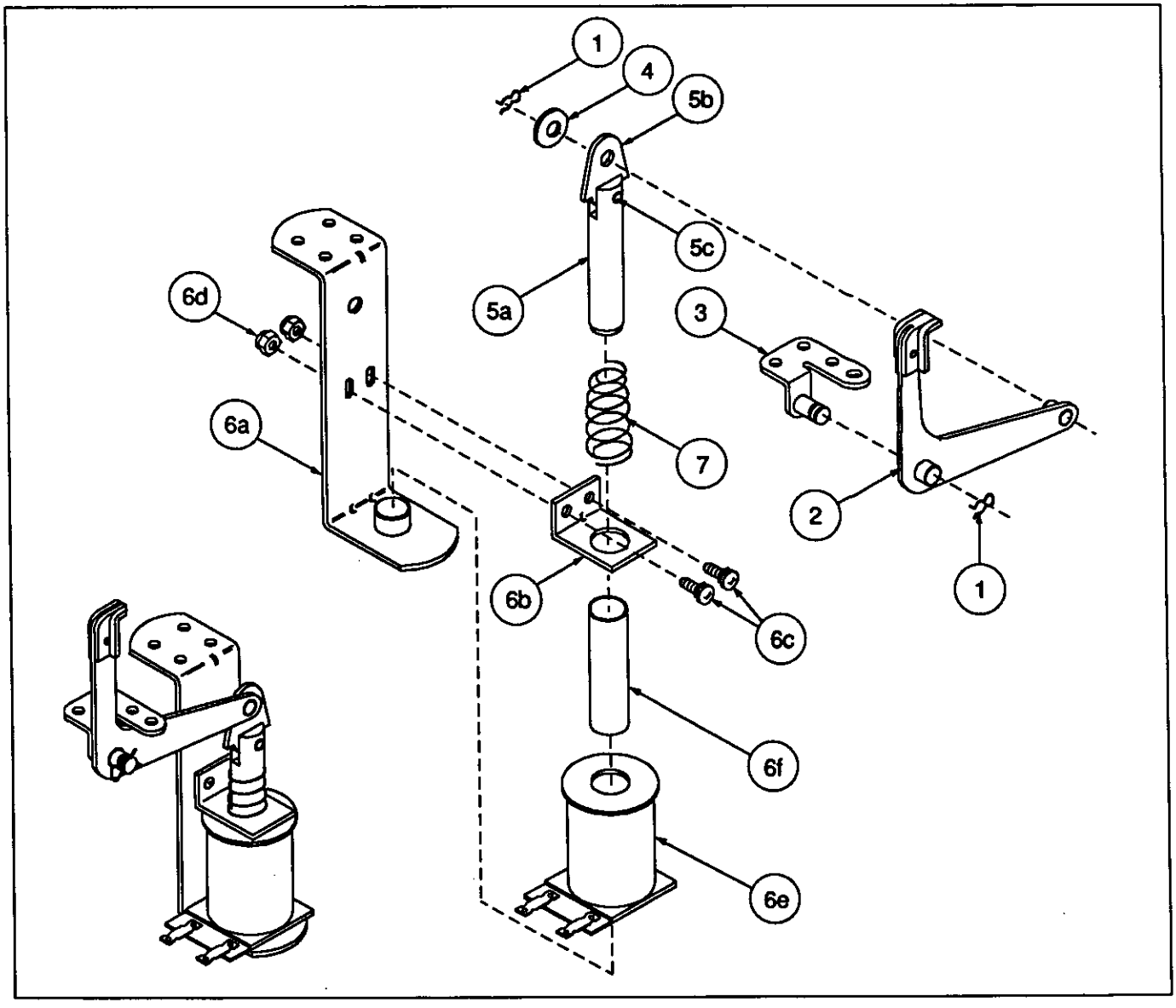

Associated Parts for **Right & Left Kickers:**

Item	Part Number	Description
1.	12-6227	Hairpin Clip
2.	A-12664	Kicker Crank Assembly
3.	A-5653	Mounting Bracket Assembly
4.	4700-00030-00	Flatwasher, 17/64 x 1/2 x 15ga.
5.	A-5103	Coil Plunger Assembly
a)	02-2364	Coil Plunger
b)	03-8085	Armature Link
c)	20-8716-5	Roll Pin, 1/8 x 7/16"

Item	Part Number	Description
6.	**A-14369-L**	**Coil & Bracket Assy., Left**
a)	B-7572-1	Bracket & Stop Assembly
b)	01-8-508-S	Coil Retaining Bracket
c)	4006-01017-06	Mach. Screw, 6-32 x 3/8
d)	4406-01119-00	Nut, 6-32 ESN
e)	AE-27-1200	Coil Assembly
f)	03-7066	Coil Tubing
7.	10-128	Spring

A-14107
Kicker Assembly

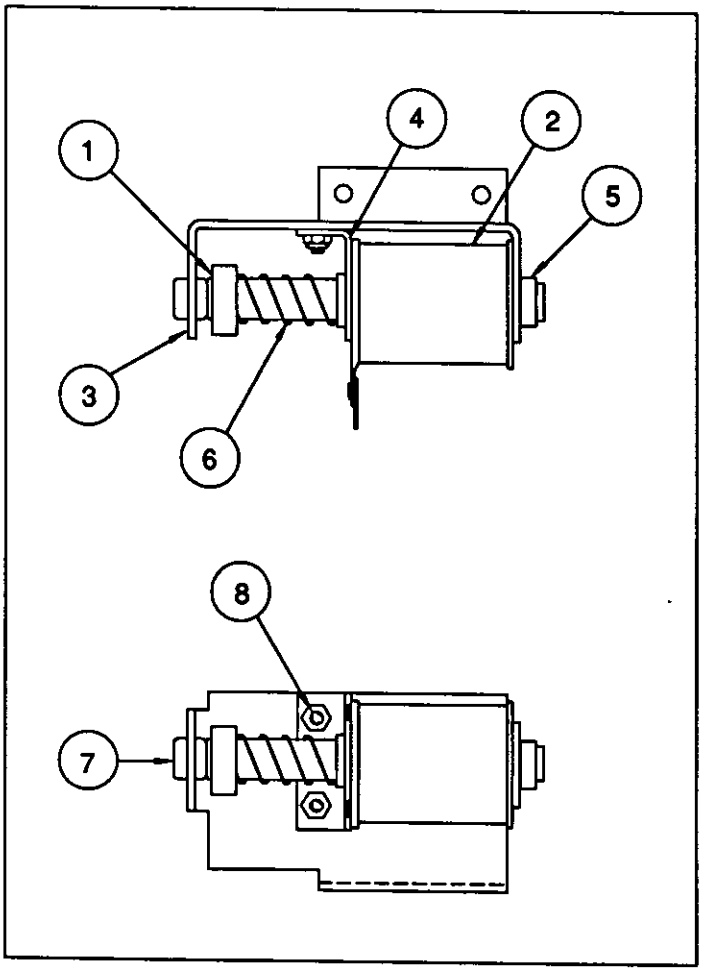

Item	Part Number	Description
1.	A-17767	Bell Armature Assembly
2.	AE-26-1200	Coil Assembly
3.	A-14106	Mtg. Bracket Assembly
4.	01-9423	Coil Bracket
5.	03-7067	Coil Tubing
6.	10-135	Solenoid Spring
7.	23-6420	Rubber Grommet
8.	4408-01119-00	Nut 8-32 ESN

A-15115
Kicker Assembly

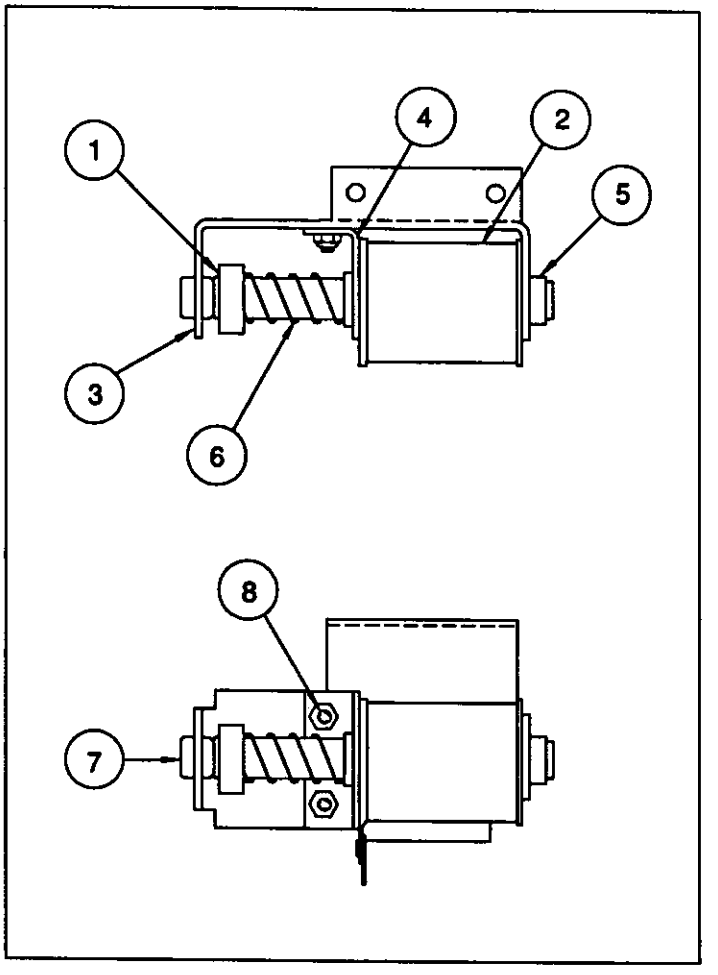

Item	Part Number	Description
1.	A-17767	Bell Armature Assembly
2.	AE-26-1200	Coil Assembly
3.	A-15116	Mtg. Bracket Assembly
4.	01-9423	Coil Bracket
5.	03-7067	Coil Tubing
6.	10-135	Solenoid Spring
7.	23-6420	Rubber Grommet
8.	4408-01119-00	Nut 8-32 ESN

A-15367
Knockoff Assembly

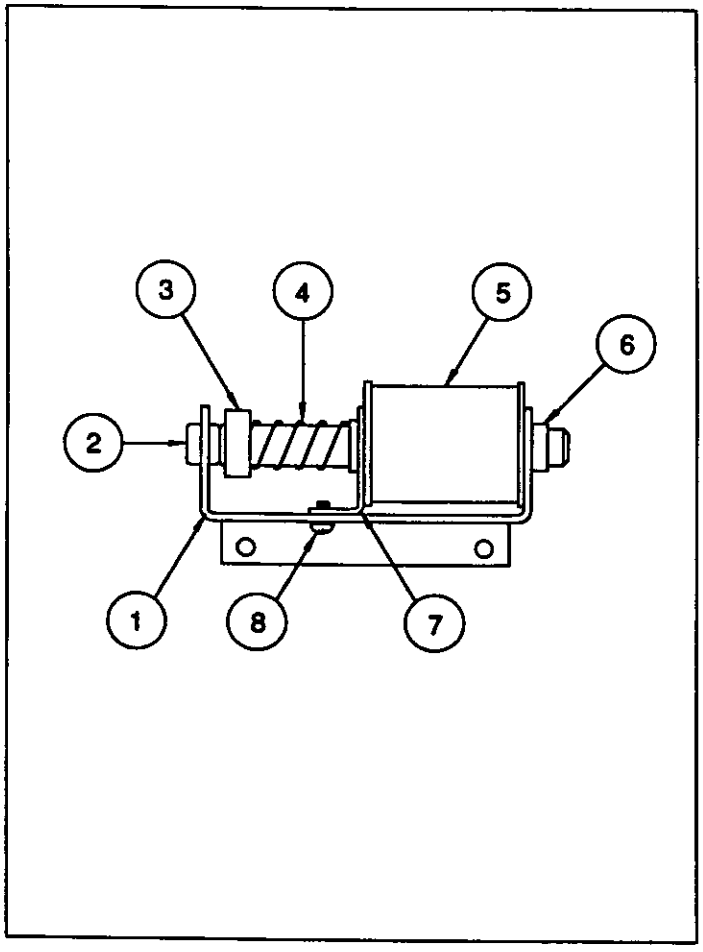

Item	Part Number	Description
1.	01-10651	Bracket Assembly
2.	23-6420	Rubber Grommet
3.	A-15370	Plunger Assembly
4.	10-135	Solenoid Spring
5.	AE-30-2000	Coil Assembly
6.	03-7067-5	Coil Tubing
7.	01-8-508-T	Solenoid Bracket
8.	4008-01017-04	Mach. Screw, #8-32 x 1/4"

A-15368
Eject Assembly

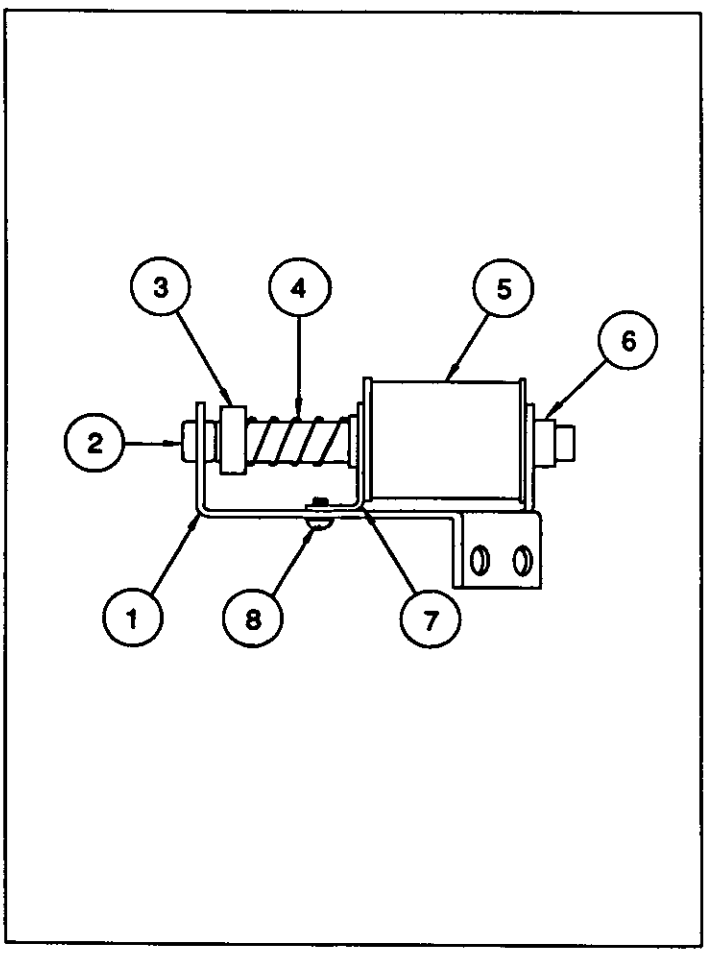

Item	Part Number	Description
1.	01-10652	Bracket Assembly
2.	23-6420	Rubber Grommet
3.	A-15371	Plunger Assembly
4.	10-135	Solenoid Spring
5.	AE-27-1200	Coil Assembly
6.	03-7067-5	Coil Tubing
7.	01-8-508-T	Solenoid Bracket
8.	4008-01017-04	Mach. Screw, #8-32 x 1/4"

A-15267
Knocker Assembly

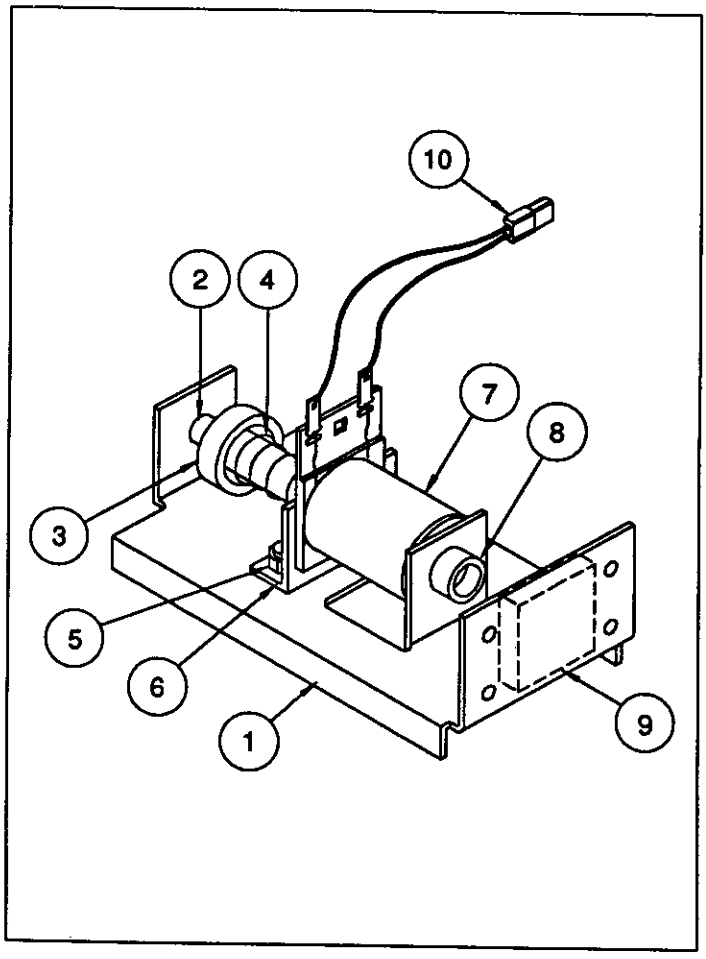

Item	Part Number	Description
1.	A-15266	Knocker Bracket Assy.
2.	23-6420	Rubber Grommet
3.	A-17767	Bell Armature Assembly
4.	10-135	Solenoid Spring
5.	4408-01119-00	Nut 8-32 ESN
6.	01-9423	Coil Bracket
7.	AE-23-800	Coil Assembly
8.	03-7067	Coil Tubing
9.	23-6629	Bumper Pad
10.	H-11835	Cable

A-15040
Diverter Assembly

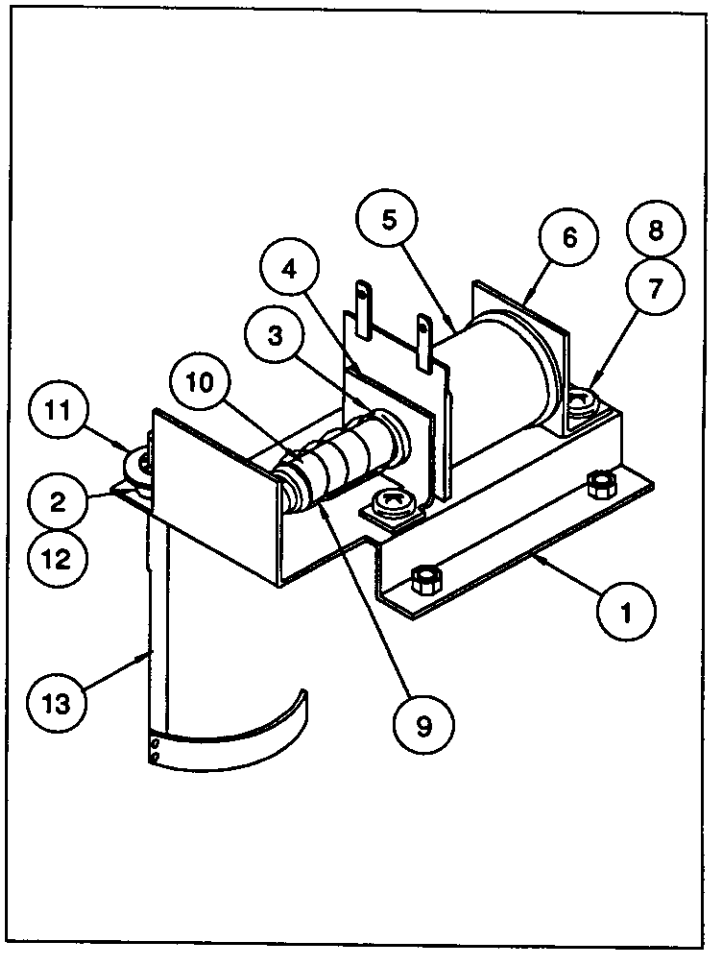

Item	Part Number	Description
1.	A-15041	Mounting Bracket
2.	20-8790	Nylined Bearing
3.	03-7066	Coil Tubing
4.	01-8413	Coil Mounting Bracket
5.	AE-26-1500	Coil Assembly
6.	A-10821	Flipper Stop Bracket Assy.
7.	4010-01008-06	Mach. Screw, 10-32 x 3/8
8.	4701-00004-00	Lockwasher #10 Split
9.	10-437	Spring Kicker
10.	A-13278	Plunger Assembly
11.	A-14185	Drive Arm Assembly
12.	4010-01082-04	Set Screw, 10-32 x 1/4" SH-CP

■ **Associated Part:**

13.	A-15039	Diverter Assembly

A-15361
Tilt Mechanism Assembly

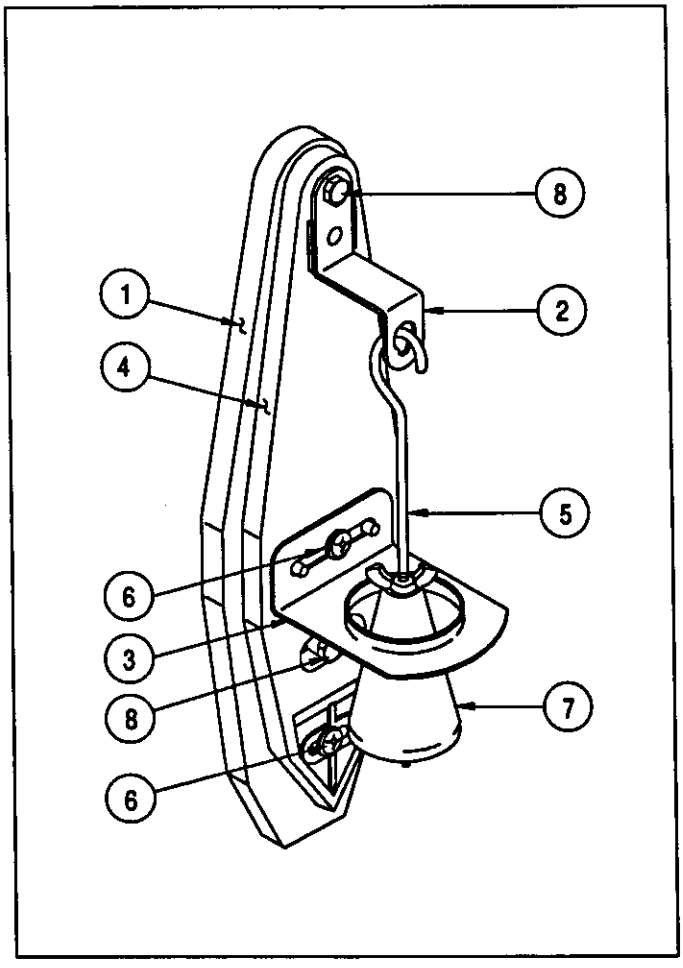

Item	Part Number	Description
1.	A-15360	Mount Plate, Tilt Mech.
2.	01-3444	Bracket, Tilt Upper
3.	01-3445	Bracket, Tilt Lower
4.	03-8668	Pendulum, Tilt Mech.
5.	12-6231	Wire, Plum Bob
6.	4006-01113-06	MS, 6-32 x 3/8 PL-HEX-WHD

■ **Associated Parts**

7.	20-6502-A	Plum Bob
8.	4406-01120-00	Wing Nut (2)

Coil Magnet & Bracket Assembly

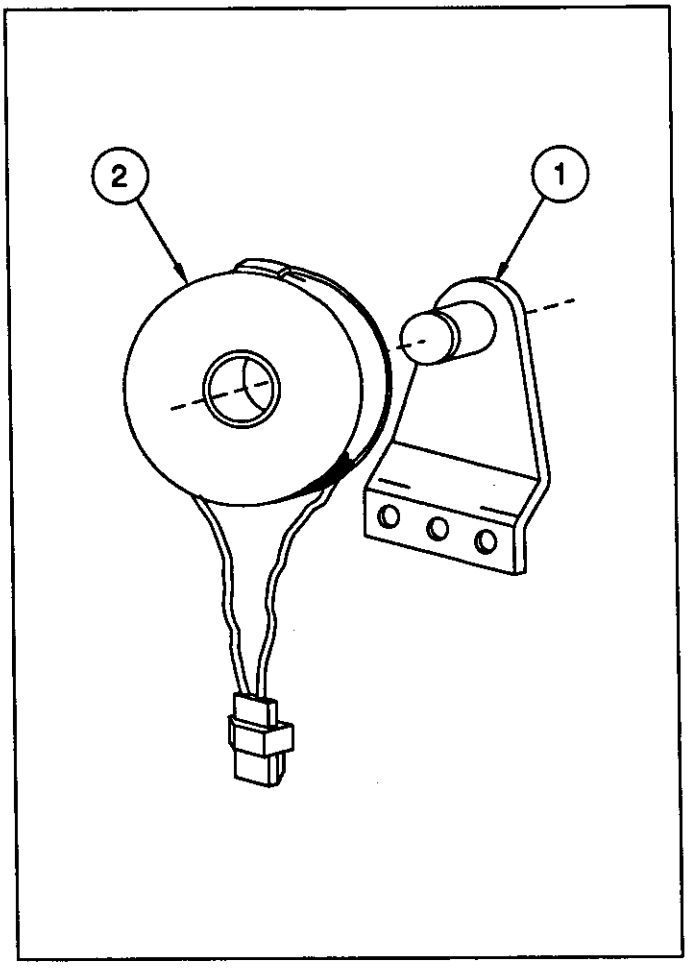

Item	Part Number	Description
1.	A-15257	Bracket & Pole Piece Assy.
2.	20-9247	Coil Magnet

B-8925 Ball Trough Switch Plate Assembly

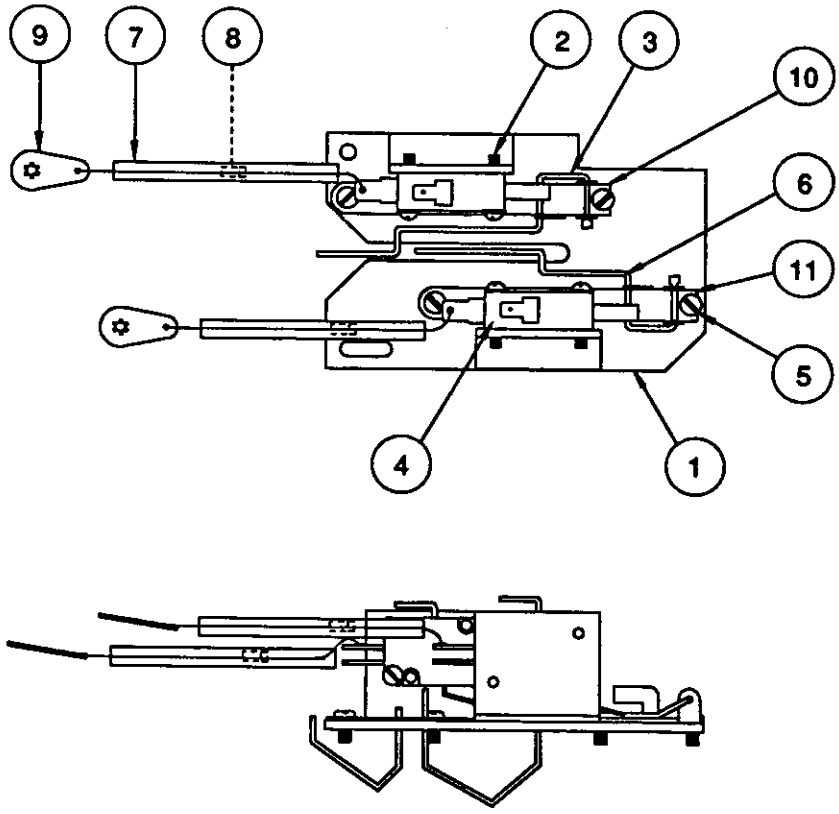

Item	Part Number	Description
1.	A-8924	Mounting Plate Brkt. Assembly
2.	4004-01003-10	Mach. Screw, 4-40 x 5/8 P-PH-S
3.	12-6546	Ball Switch Wireform
4.	5647-09957-00	Mini-Micro Switch
5.	4005-01005-02	Mach. Screw, #5-40 x 1/8 P-PH
6.	12-6547	Ball Switch Wireform
7.	23-6710-2	Coil tubing #10
8.	5070-09054-00	Diode 1N4004
9.	5825-09372-00	#6 Solder Lug
10.	01-60-A	R.O. Switch Bracket
11.	01-60-F	R.O. Switch Bracket

B-12445-4-BR Ball Shooter Assembly

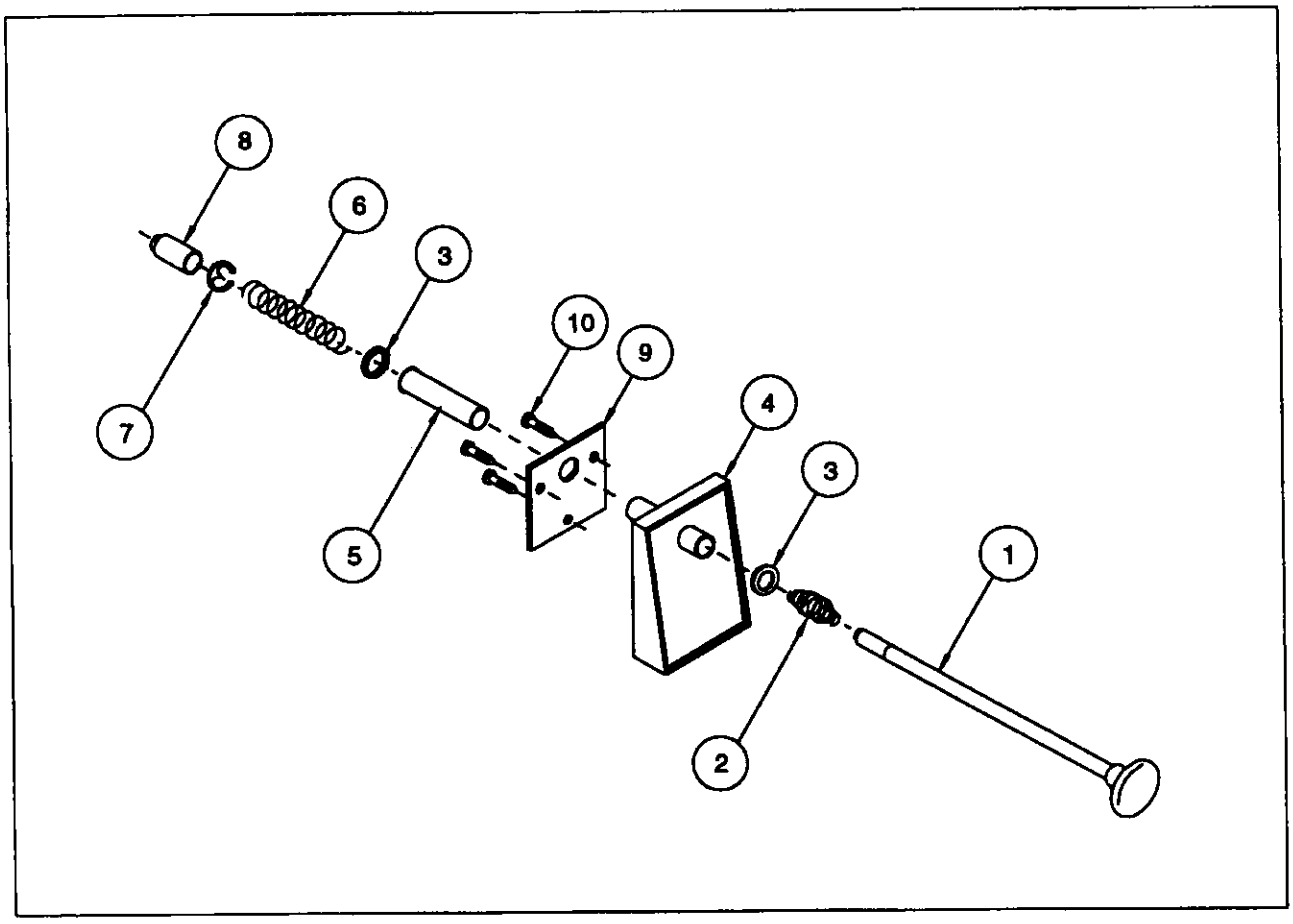

Item	Part Number	Description
1.	20-9253-7	Rod Assembly
2.	10-149	Rod Spring
3.	4700-00051-00	Flatwasher, 25/64 x 5/8 x 16ga.
4.	21-6645-1-BR	Ball Shooter Housing, Brass
5.	03-7357	Shooter Sleeve
6.	10-148-4	Shooter Spring
7.	20-8718-1	"C" Retaining Ring
8.	23-6327	Rubber Shooter Tip

■ **Associated Parts:**

9.	01-3535	Mounting Plate
10.	4010-01006-10	Mach. Screw, #10-32 x 5/8

A-15200 Kickout Assembly

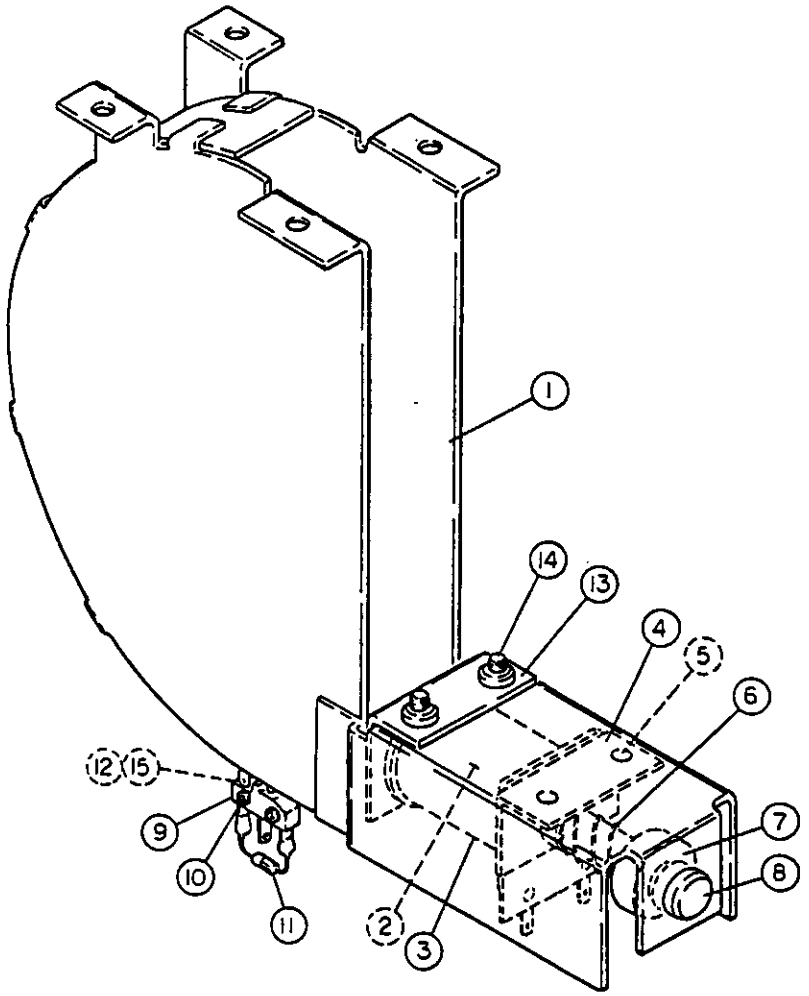

Item	Part Number	Description
1.	A-15201	Kickout Sub-Assembly
2.	03-7067	Coil Tubing
3.	AE-23-800	Coil Assembly
4.	01-9423	Coil Bracket Assy.
5.	4408-01119-00	Nut 8-32 ESN
6.	10-135	Solenoid Spring
7.	A-17767	Bell Armature Assembly
8.	23-6420	Rubber Grommet

Item	Part Number	Description
9.	5647-12693-25	Mini Micro Switch
10.	4002-01105-07	Mach. Screw, 2-56 x 7/16P-PH-S
11.	5070-09054-00	Diode 1N4004
12.	01-8240	Nut Plate, #2-56
13.	A-15376	Coil Bracket - Front
14.	4008-01003-06	Mach. Screw, 8-32 P-PH-S
15.	01-8600	Insulator

A-17411 Hand Drive Assembly

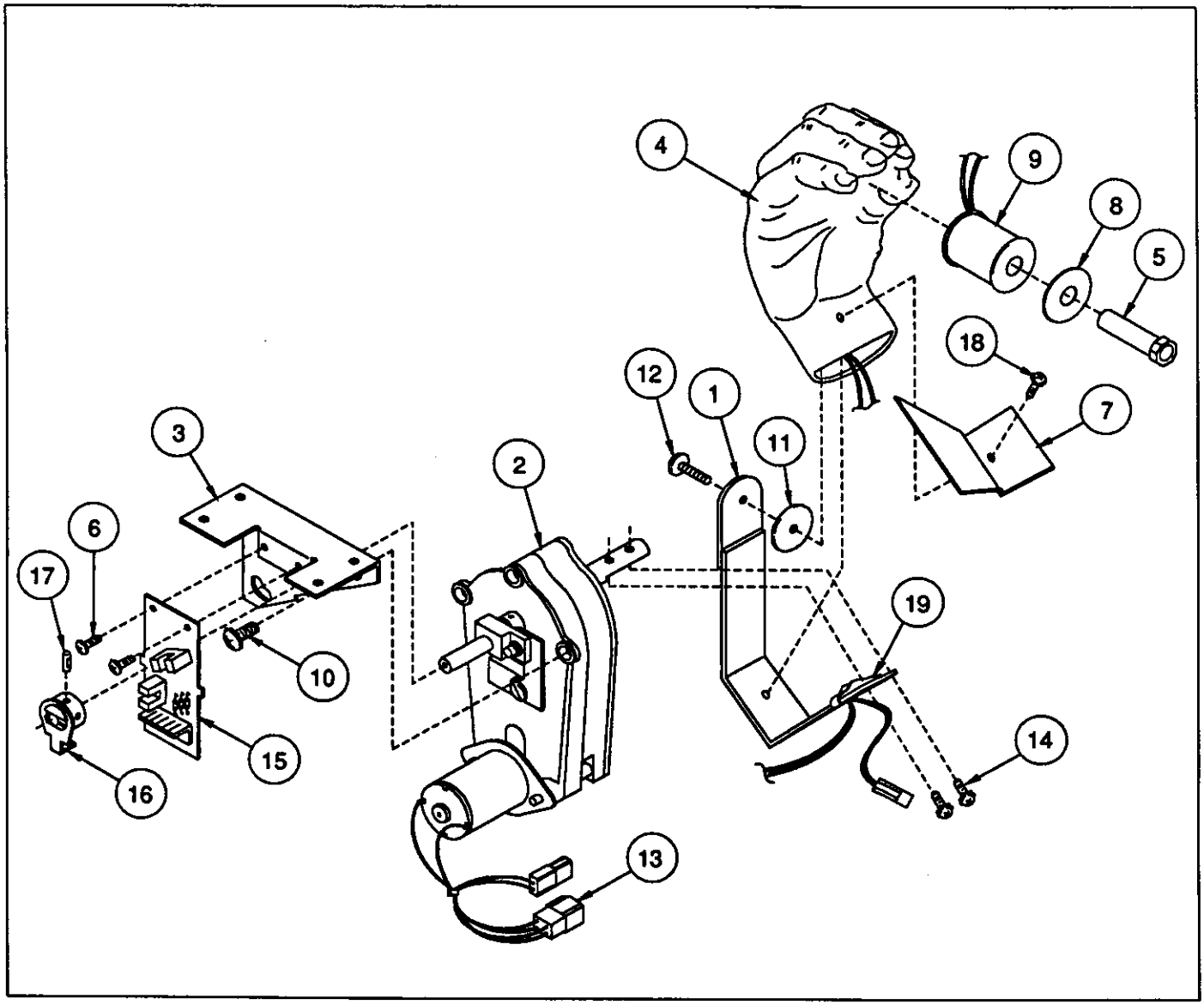

Item	Part Number	Description
1.	A-15303	Bracket Assembly
2.	14-7966	Motor 140
3.	01-10561	Motor Bracket
4.	31-1684	Hand - Decorated
5.	02-4603	Magnet Core
6.	4006-01003-04	Mach. Screw, 6-32 x 1/4"
7.	01-10655	Anti-Trap Bracket
8.	31-1677	Washer, Color
9.	A-12158-1	Coil Assembly
10.	4020-01003-08	Mach. Screw, 1/4-20 x 1/2"

Item	Part Number	Description
11.	4700-00130-00	Flatwashwer, 1 x 2 x 16ga.
12.	4010-01062-10	Mach. Screw, 10-32 x 5/8"
13.	H-15228	Hand Cable Assembly
14.	4008-01003-08	Mach. Screw, 8-32 x 1/2"
15.	A-15285	Opto Switch-2 PCB Assy.
16.	A-15310	Interrupter Assembly
17.	4010-01082-04	Set Screw, 10-32 x 1/4"
18.	4010-01006-10	Mach. Screw, 10-32 x 5/8"
19.	03-7520	Ty-Wrap Nylon

A-15258
Chair Bracket Assembly

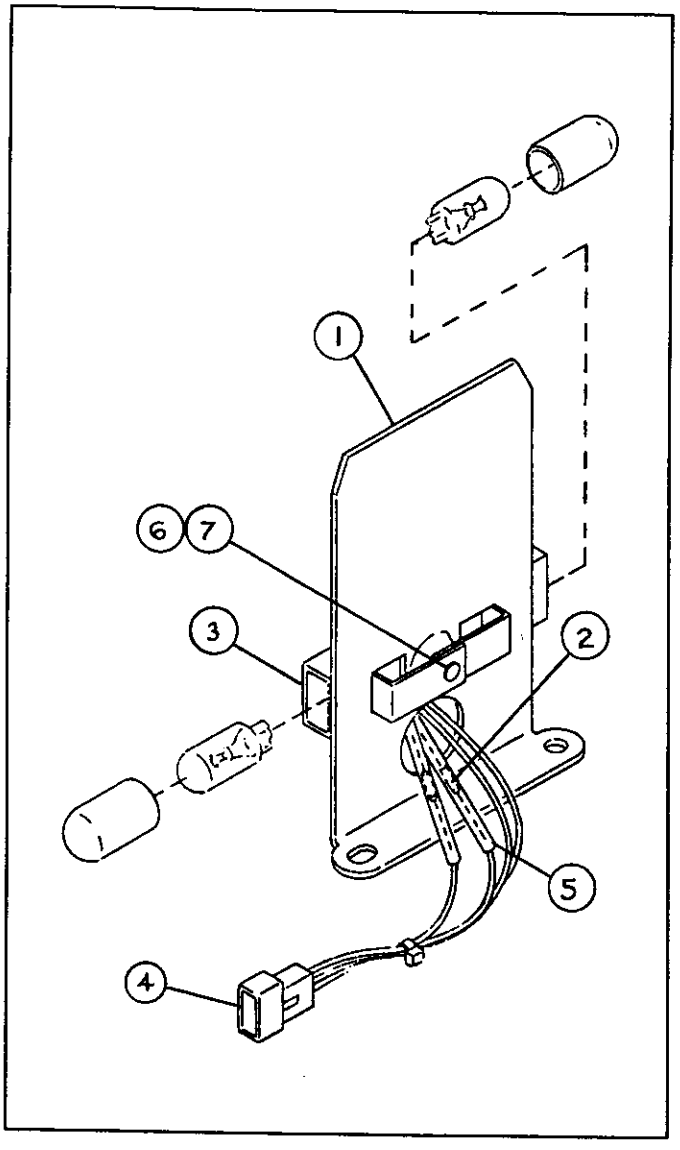

Item	Part Number	Description
1.	01-10593	Chair Bracket
2.	5070-09054-00	Diode 1N4004, 1.0A
3.	24-8807-1	Wedge Socket w/Brkt (2)
4.	H-15237	Cable Assembly
5.	23-6710-3	Tubing #10 (2")
6.	4700-00003-00	Flatwasher, 1/8 x 9/32 x 22ga.
7.	07-6688-17N	Rivet, 1/8 x 5/32'

■ **Associated Parts:**

24-8768	Bulb #555 (2)
03-8063-4	Sleeve, Red
03-8063-6	Sleeve, Yellow
03-8647	Plastic Molded Chair

A-14962
Loop Assembly

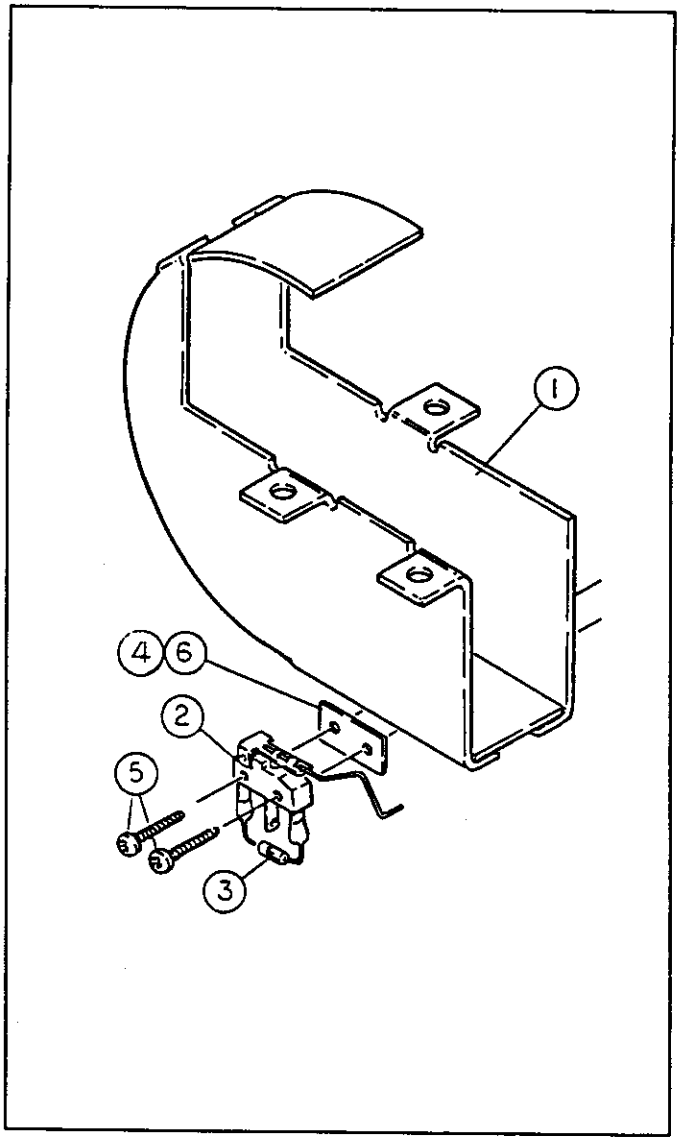

Item	Part Number	Description
1.	A-14963	Loop Assembly
2.	5647-12693-25	Mini Micro Switch
3.	5070-09054-00	Diode 1N4004
4.	01-8240	Nut Plate, #2-56
5.	4002-01105-07	Mach. Screw, 2-56 x 7/16 P-PH-S
6.	01-8600	Insulator

A-14964 Lockup Loop Assembly

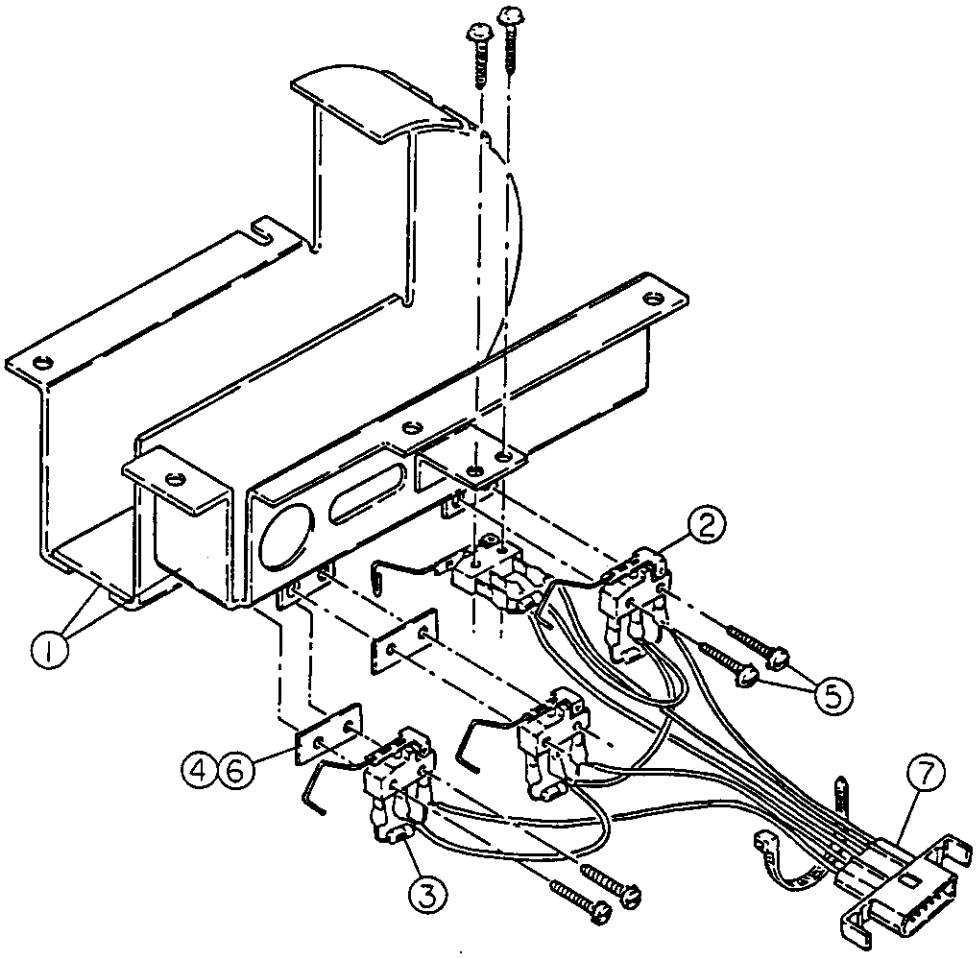

Item	Part Number	Description
1.	A-14965	Lockup Loop Assembly
2.	5647-12693-25	Mini Micro Switch
3.	5070-09054-00	Diode 1N4001
4.	01-8240	Nut Plate #2-56
5.	4002-01105-07	Mach. Screw, 2-56 x 7/16 P-PH-S
6.	01-8600	Insulator
7.	H-15433	4-Switch Cable

A-14970-1 Bookcase Assembly

Item	Part Number	Description	Qty.
1	01-10398	Mounting Bracket	1
2	A-15474	Motor & Crank Assembly	1
a)	14-7969	Motor, Bookcase (1)	
b)	03-8619	Crank, Bookcase (1)	
c)	20-8716-2	Rollpin 3/32 x 5/8 (1)	
3	01-10399	Switch Bracket	2
4	5647-12693-08	Mini Micro Switch	2
5	5070-09054-00	Diode 1N4004 1.0A	2
6	01-8240	Nut Plate #2-56	2
7	4002-01105-07	MS 2-56 x 7/16 P-PH-S	4
8	4008-01005-10	MS 8-32 x 5/8 P-PH	4
9	RM-27-02	Slit Hose Sleeve	7-1/2"
10	03-8620	Actuator, Bookcase	1
11	4108-01031-14	SMS #8 x 7/8 P-TH-Type 25	2
12	4700-00016-00	FW .187 x .437 x .053	5
13	03-7520-2	Nylon Ty-Wrap	3
14	07-6688-18N	Rivet 3/16 x 1/8 Nickel	4
15	02-4003	Bumper Post 8-32	4
16	23-6535	Rubber Bumper	4
17	03-7655-4	Harness Clip 1/4	2
18	4408-01119-00	Nut 8-32 ESN	5
19	4106-01004-10	SMS #6 x 5/8 P-PH-ST	2
20	A-15018	4 Infra Red LED Assembly	1
21	03-8623-1	Base, Bookcase	1
22	03-8622-1	Frame, Bookcase	1
23	03-8621-1	Cover, Bookcase	1
24	01-10725	Bracket, Ty-Wrap	1
25	H-15229	Cable Assembly	1
26	23-6674	Bumper Pad 1-1/8 x 2-5/16	1
27	07-6688-22N	Rivet 5/16 x 1/8 Nickel	2
28	4700-00003-00	FW .125 x .281 x .032	2
29	03-8624	Lens, Bookcase	4
30	A-15017	4-Opto PCB Assembly	1
31	4106-01004-06	SMS #6 x 3/8 P-PH-Type 11	2
32	4108-03013-08	SMS #8 x 1/2 P-PH-Type 25	3
33	02-4419	Adjusting Screw	1
34	02-4418	Shaft 2-1/2	1
35	03-8347	Gland	1
36	20-9610	Flange Bearing	2
37	03-8363-1	Locking Nut	1
38	4008-01157-10	MS 8-32 x 5/8 P-PH-S-Ny	1
39	4008-01017-08	MS 8-32 x 1/2 P-PH-S	1
40	H-15227	Bookcase Switch Cable	1
41	4700-00070-00	FW .187 x .625 x .059	2
42	16-9305*	Label, Height Adjustment	1
43	4008-01157-06	MS 8-32 x 3/8 P-PH-S	1
44	31-1664-25	Screened Playfield Plastic	1
45	31-1664-37	Screened Playfield Plastic	1

*Adhered to underside of Item 1, Mounting Bracket.

A-14970-1 Bookcase Assembly

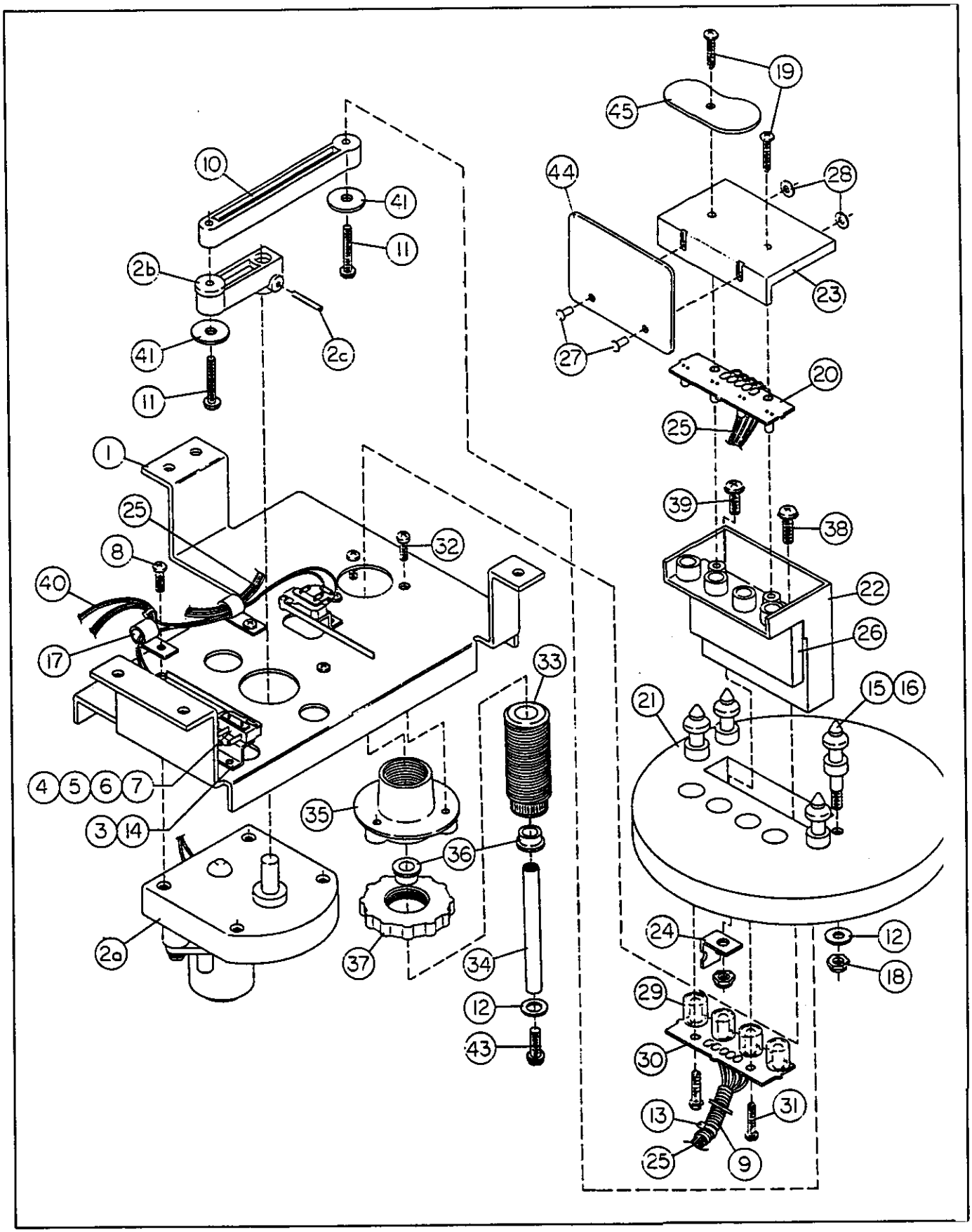

A-16970-120V
A-16970-230V
Line Filter Assembly

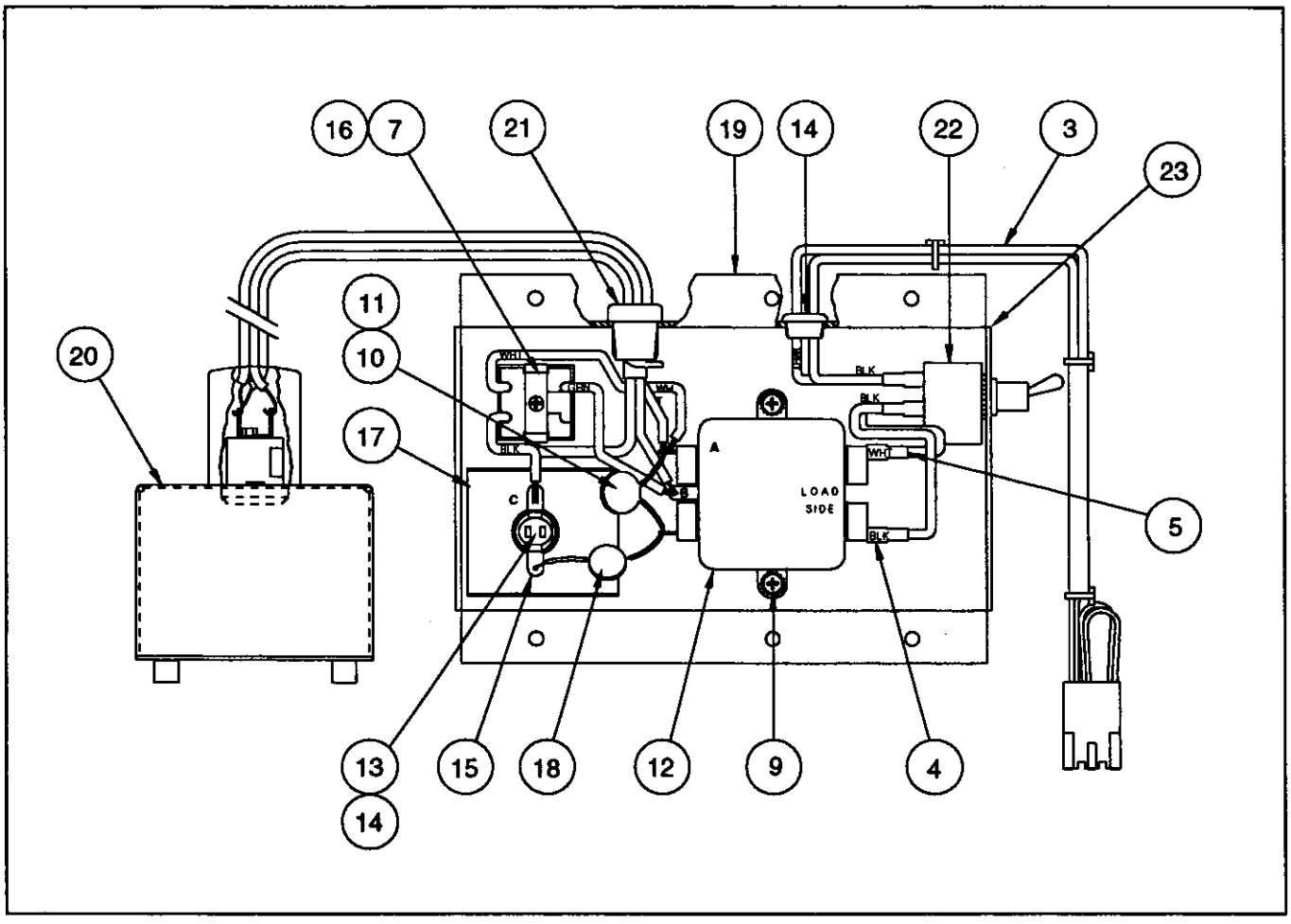

Item	Part Number	Decription	Item	Part Number	Decription
1.	H-13870	Black Jumper Cable	13.	5730-09252-00	Fuse 8A 250V
2.	H-13871	Orange Jumper Cable	14.	5731-09651-00	Fuse SB 5A 250V
3.	H-14790	A.C. Cable	15.	5733-12869-00	Fuse Holder Panel Mount
4.	H-14792-1	A.C. Cable, Black	16.	5851-09184-00	SER Outlet Snap-In
5.	H-14792-2	A.C. Cable, White	17.	01-10623	Insulator, Thermistor
6.	RM-21-06	#18 Vinyl Fgls	18.	5016-12978-00	Thermistor 8A 2.5R25
7.	03-8928	Tube Plug 1" Sq.	19.	A-14810-1	Chassis Assembly
8.	03-8591	Bushing-Strain Relief	20.	A-15473-1	IEC Power Input Assembly
9.	4008-01017-08	Mach. Screw, 8-32 x 1/2" P-R	21.	03-8712	Bushing-Strain Relief
10.	5017-09044-00	Varistor Metox 10A	22.	5640-13250-00	Toggle Switch, DPST
11.	5017-09063-00	Varistor 275V 15J	23.	A-16969	Switch Mounting Plate Assembly
12.	5102-10310-00	Line Filter 5VK	24.	4406-01128-00	Nut #6-32 KEPS

COUNTRY	LINE FILTER ASSY.			CORDSET								
	A-16970-120V	A-16970-230V		5850-13271-00	5850-13272-00	5850-13273-00	5850-13274-00	5850-13275-00	5850-13276-00	5850-13277-00	5850-13278-00	A-17175-2
BELGIUM		√			√							
ENGLAND		√				√						
FRANCE		√			√							
GERMANY		√			√							
SPAIN		√			√							
UNITED STATES	√			√								

Target Assemblies

Playfield Targets

Part Number	Description	Quantity
B-11696-1	Standup Target Assembly , Blue	2
B-11696-4	Standup Target Assembly , Red	2
B-11696-5	Standup Target Assembly , White	1
B-11696-15	Standup Target Assembly , Orange	3
B-12583-1	Standup Target Assembly , Blue	1
B-12583-4	Standup Target Assembly , Red	2

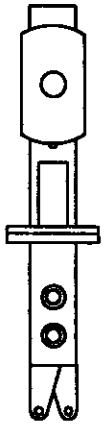

B-12583-

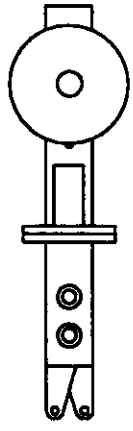

B-11696-

Unique Parts

Unique Backbox Parts

Part Number	Description
A-12738-50038	WPC Sound Board Assembly
A-12742-50038	WPC CPU Assembly
A-14376-50038	Backbox Assembly

Unique Cabinet Parts

A-12359-3-BR	Side Molding, Brass
A-18230-1	3-Ball Cashbox Assembly, Multiple
A-18257	Front Molding Assembly, Brass
B-12445-4-BR	Ball Shooter Assembly, Brass
11-1177	Wood Cabinet

Unique Playfield Parts

A-13204-50038	Bottom Arch Assembly
A-14970-1	Bookcase Assembly
A-14972-1	X-Over Ramp Assembly
03-8254-28	Jet Bumper Cap, Opaque Gold
03-8581-1	Base-Box Gold
03-8582-2	Cover-Box Gold
21-6704	Collectors Plate

Cables

Backbox Cables

Part Number	Description
H-14582	Secondary Cable
H-15233	Logic Power Cable
H-14584	Dot Matrix Display Power Cable
H-15226	House Cable
H-15263	3-4 Flipper Cable

Playfield Cables

H-14889	Flash Cable
H-15221-1	Playfield Lamp Cable
H-15222	Playfield Solenoid Cable
H-18260	Playfield Switch Cable

Cabinet Cables

H-16599	Coin Door Cable
H-17019	Dixie-Mars Interconnect Cable
H-17217	Plum Bob/Mech. Protect Cable
H-18261	Cabinet Cable
H-18524	Switch Button Cable

Metal Plastic Posts

	Part Number	Description
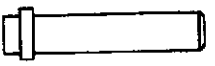	02-3409	Spring Post
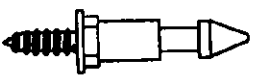	02-3905	Bumper Post #8 WS
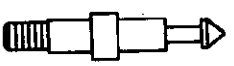	02-4003	Bumper Post 8-32 MS
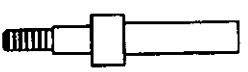	02-4036-1	Bumper Post
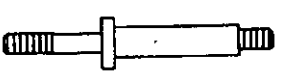	02-4056	Bumper Post
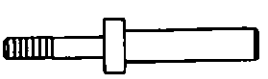	02-4057	Bumper Post, 2-3/16"
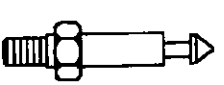	02-4177	Bumper Post 8-32 x 15/32"
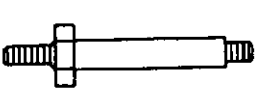	02-4342-1	Bumper Post
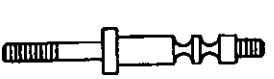	02-4423-1	Double Bumper Post: 2-21/32"
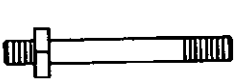	02-4424-1	Post 6-32/8-32 2-1/32"
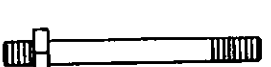	02-4425-1	Post 8-32/ #8-32 2-3/8"
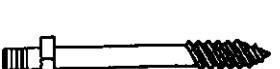	02-4426-1	Post #6-32 /8 1-29/32"

Metal Plastic Posts (Continued)

	Part Number	Description
	02-4434	Post, #8 x 1"
	02-4435	Post, #8 x 1-3/16"
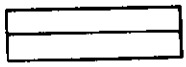	02-4436-5 02-4436-7 02-4436-15	F-F Spacer, 1/4 x 2.83" F-F Spacer, 1/4 x 1-1/2" F-F Spacer, 1/4 x 1-7/16"
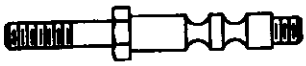	02-4493	Double Bumper Post (Hex)
	03-8247-13	Double Star Post, Clear
	03-8319-9	Star Post #8

UPPER PLAYFIELD PARTS

Item	Part Number	Description
1	20-9250-6	Flipper & Shaft, Yellow (3)
2	A-15252-L	Flipper Ball Guide Assy.
3	12-6466-5	Guide Wire, 1 1/4"
4	12-6466-6	Guide Wire, 1 1/2"
5	A-15239	Ball Guide Assembly
6	20-9264-6	Small Flipper & Shaft
7	A-15199	Opto Ball Guide Assy.
8	B-11696-1	Standup Target, Blue
9	A-15197	Opto Ball Guide Assy.
10	B-9414-3	Jet Bumper Assembly
	03-8254-8	Jet Bumper Cap, Amber
11	A-15258	Chair Bracket Assembly
	03-8647	Electric Chair
	24-8768	#555 Bulb (2)
	03-8063-4	Lamp Sleeve, Red
	03-8063-6	Lamp Sleeve, Yellow
12	B-9414-3	Jet Bumper Assembly
	03-8254-16	Jet Bumper Cap, Yellow
13	B-9414-3	Jet Bumper Assembly
	03-8254-28	Jet Bumper Cap, Gold
14	B-11696-4	Standup Target, Red (2)
15	B-12583-4	Oblong Target, Red (2)
16	B-9414-3	Jet Bumper Assembly
	03-8651-13	Jet Bumper Cap, Clear
17	B-9414-3	Jet Bumper Assembly
	03-8254-9	Jet Bumper Cap, Red
18	A-15039	Diverter Assembly
19	B-12583-1	Oblong Target, Blue
20	A-15246	Ball Guide Assembly
21	A-15241	Ball Guide Assembly
22	A-15244	Ball Guide Assembly
23	B-11696-5	Standup Target, White
24	A-15374	Dampening Bracket
25	03-8581-1	Box Base
	03-8582-1	Box Cover
	01-10654	Box Retaining Brkt.
26	A-15247	Ball Guide Assembly
27	A-15243	Ball Guide Assembly
28	12-7026	Guide Bar Wire
29	A-15240	Ball Guide Assembly
30	01-10454	Deflector Bracket
31	A-15251	Ball Guide Assembly
32	A-14974	Ball Guide, Shooter Ramp
33	A-14970-1	Bookcase Assembly
34	A-15248	Ball Guide Assembly
35	A-15242	Ball Guide Assembly
36	A-15250	Ball Guide Assembly
37	B-11696-15	Standup Target, Orange (3)
38	A-14196	Shooter Gate Assembly
39	A-15245	Ball Guide Assembly
40	12-6466-12	Guide Wire, 3"
41	A-15252-R	Flipper Ball Guide Assy.
42	01-10621	Strike Plate
	03-8633	Level Mounting Bracket
	20-9691	Level
43	A-15249	Ball Guide Assembly
44	A-8039-3	Ball Release Assembly

Not Shown:

A-13204-50038	Bottom Arch Assembly
12-6842-1	Wire Fence Brass
31-1008-50038	Bottom Arch Brass
A-13769-50038	*Screened Playfield
A-15369-1	Playfield Plastic Assy.
A-15369-2	Playfield Plastic Assy.
A-15369-3	Playfield Plastic Assy.
A-15369-4	Playfield Plastic Assy.
A-15369-5	Playfield Plastic Assy.
A-15369-6	Playfield Plastic Assy.
A-15375	Cloud Assembly
A-8645	Wire Form & Bracket
B-8623	Guide & Baffle Assy.
C-8235	Ball Runway Assy.
01-3569-1	Ball Return Runway
01-5575	Bottom Arch Mtg. Brkt.
01-8419	Holdown Bracket (2)
03-7960-20017-1	Full Playfield Mylar
03-7960-20017-2	Jet Area Mylar
03-7960-20017-3	Drop Area Mylar
20-6500	1 1/16 Steel Ball
31-1664-1 thru 41	Playfield Plastics

* The ADDAMS FAMILY Special Collectors Edition playfield has a special hardcoat surface and does not require a full mylar. However, mylars can be purchased through your local Bally Distributor.

PLAYFIELD PARTS LOCATIONS (UPPER)

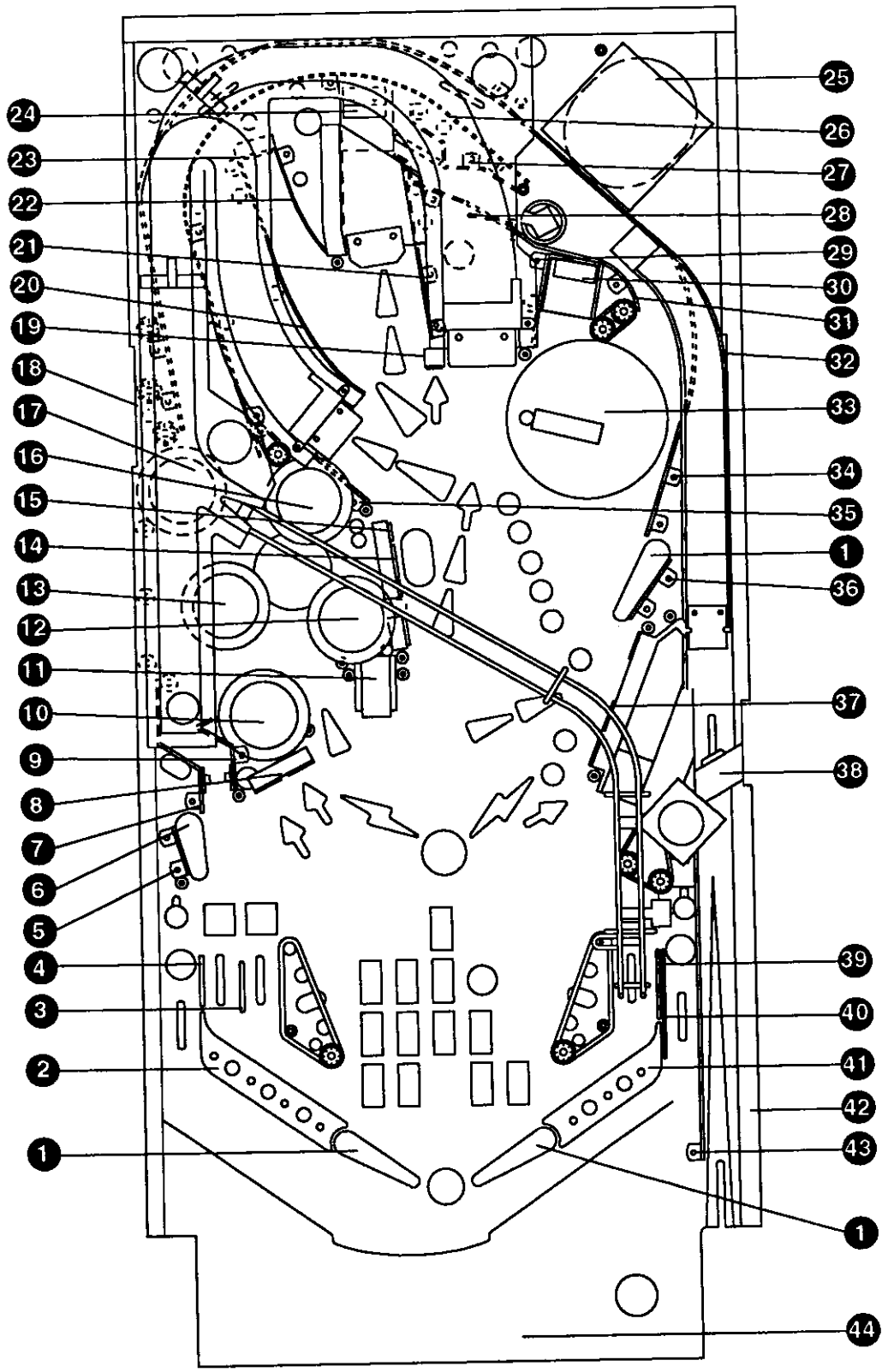

LOWER PLAYFIELD PARTS

Item	Part Number	Description
1	C-13940	5 Switch & Diode Assy.
2	A-14977	7 Opto PCB Switch Assy.
3	01-10427	Diverter Support Bracket
	A-14185	Drive Arm Assembly
	A-15040	Diverter Assembly
	A-13278	Plunger Assembly
	10-437	Kicker Spring, Heavy
4	A-9415-2	Jet Bumper Coil Assy. (5)
	B-12030-2	Switch & Diode Assy. (5)
	A-12753-2	Lug & Diode Assembly (5)
5	A-14962	Loop Assembly
6	A-15115	Kicker Assembly
7	A-15849-L-1	Flipper Assembly
8	01-9510	Post Adj. Plate #8 (2)
9	A-14369-L	Coil & Bracket Assy.
	B-8284-1	Kicker Count Switch Assy.
	B-12665	Nylon Kicker Assembly
	10-128	Spring
10	A-15849-L-4	Flipper Assembly
11	A-15139	Hi-Powered PCB Assy.
12	B-8925	Micro Switch Plate Assy.
13	B-9362-L-2	Coil & Bracket Assy.
	10-128	Spring
	C-9638	Outhole Eject Assy.
14	A-15849-R-4	Flipper Assembly
15	A-14369-L	Coil & Bracket Assy.
	A-11539-1	Kicker Switch Assy.
	B-12665	Nylon Kicker Assembly
	10-128	Spring
16	A-15367	Knockoff Assembly
17	A-14107	Kicker Assembly
18	A-14964	Lock-up Loop Assembly
19	20-9247 (3)	Coil Magnet
20	A-15257 (3)	Brkt. & Pole Piece Assy.
21	01-10446	Swamp Bracket
22	A-15849-R	Flipper Assembly
23	A-15070	Chute Ramp Assy.
24	A-15200	Kickout Assembly
25	A-15368	Eject Assembly
	A-9381-R	Switch & Bracket Assy.
26	A-14711	Hand Drive Assembly
27	A-14703	Box Assembly
28	A-14970-1	Bookcase Assembly

Not Shown:

A-14632-3	3/4" Mtg. Brkt. Clamp Assy.
A-14632-4	1" Mtg. Brkt. Clamp Assy.
A-15542	Motor EMI Board
01-8726-L-1	Playfield Holder Brkt., Left
01-8726-R-1	Playfield Holder Brkt., Right
5731-09651-00	Fuse
5733-10702-01	Fuse Holder

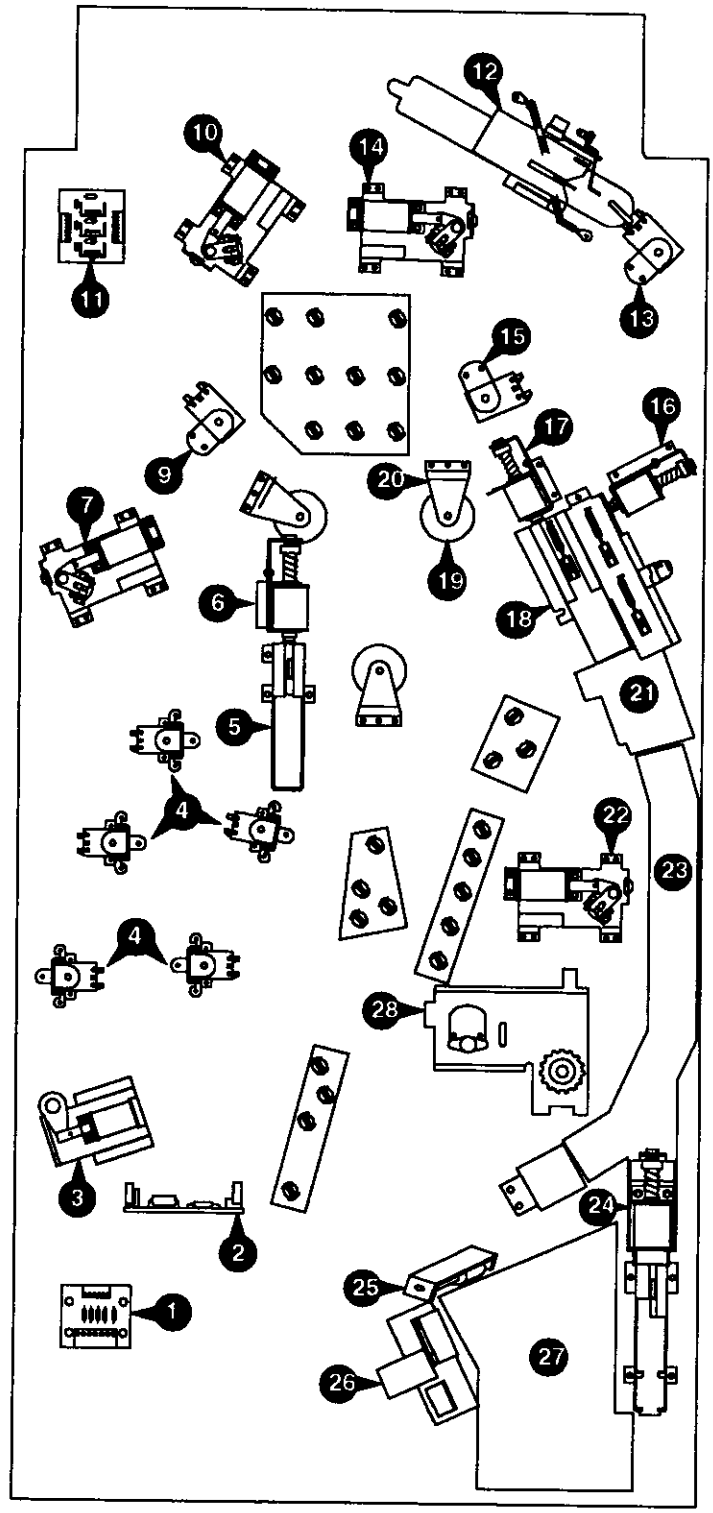

Underside of Playfield, Viewed in Raised Position

SWITCH LOCATIONS

Item	Switch Number	Switch Assy.	Description
11-12	---	20-9663-9	Buy-In
13	---	20-9663-1	Start Button
14	---	20-6502-A	*Plumb Bob Tilt
15	5647-09957-00	B-8925	Left Trough
16	5647-09957-00	B-8925	Center Trough
17	5647-12693-08	A-11680	Right Trough
18	5647-12133-12	A-10417	Outhole
21	---	27-1066	*Slam Tilt
22	---	A-8630	*Coin Door Closed
23	---	Not Used	*Ticket Opto.
24	---	A-8630	*Always Closed
25	5647-12693-19	A-12688	Right Flipper Lane
26	5647-12693-19	A-12688	Right Outlane
27	5647-12693-04	A-11619	Ball Shooter
28	---	---	Not Used
31	SW-11A-37	B-12030-2	Upper Left Jet
32	SW-11A-37	B-12030-2	Upper Right Jet
33	SW-11A-37	B-12030-2	Center Left Jet
34	SW-11A-37	B-12030-2	Center Right Jet
35	SW-11A-37	B-12030-2	Lower Jet
36	SW-1A-114	B-8284-1	Left Slingshot
37	SW-1A-120	A-11539-1	Right Slingshot
38	5647-12693-19	A-12688	Upper Left Loop
41	---	B-11696-1	Grave "G"
42	---	B-11696-1	Grave "R"
43	5647-12693-25	A-14962	†Chair Kickout
44a	---	B-11696-4	Cousin It (2)
b	---	B-12583-4	(2)
45	---	B-11696-15	Lower Swamp Million
46	---	---	Not Used
47	---	B-11696-15	Center Swamp Million
48	---	B-11696-15	Upper Swamp Million
51	5647-12693-19	A-15372	Shooter Lane
52	---	---	Not Used
53	---	A-15017/A-15018	Bookcase Opto 1
54	---	A-15017/A-15018	Bookcase Opto 2
55	---	A-15017/A-15018	Bookcase Opto 3
56	---	A-15017/A-15018	Bookcase Opto 4
57	---	A-16908/A-16909	Bumper Lane Opto
58	5647-12693-21	A-14972	Right Ramp Exit
61	5647-12693-11	A-14492	Left Ramp Enter
62	---	B-11696-5	Train Wreck
63	5647-12693-19	A-12688	Thing Eject Lane
64	5647-12693-11	A-13627-2	Right Ramp Enter
65	5647-12693-21	A-15047	Right Ramp Top
66	5647-12693-21	A-15047	Left Ramp Top
67	5647-12693-19	A-12688	Upper Right Loop
68	5647-12693-08	A-15070	Vault
71	5647-12693-25	A-14964	†Swamp Lock Upper
72	5647-12693-25	A-14964	†Swamp Lock Center
73	5647-12693-25	A-14964	†Swamp Lock Lower
74	5647-12693-25	A-14964	†Lockup Kickout
75	5647-12693-19	A-12688	Left Outlane
76	5647-12693-19	A-12688	Left Flipper Lane 2
77	5647-12693-25	A-15200	†Thing Kickout
78	5647-12693-19	A-12688	Left Flipper Lane 1
81	5647-12693-08	A-14970-1	†Bookcase Open
82	5647-12693-08	A-14970-1	†Bookcase Closed
83	---	---	Not Used
84	---	A-15285	†Thing Down Opto
85	---	A-15285	†Thing Up Opto
86	---	B-12583-1	GRAVE "A"
87	5647-12133-11	A-9381-R	Thing Eject Hole
88	---	---	Not Used

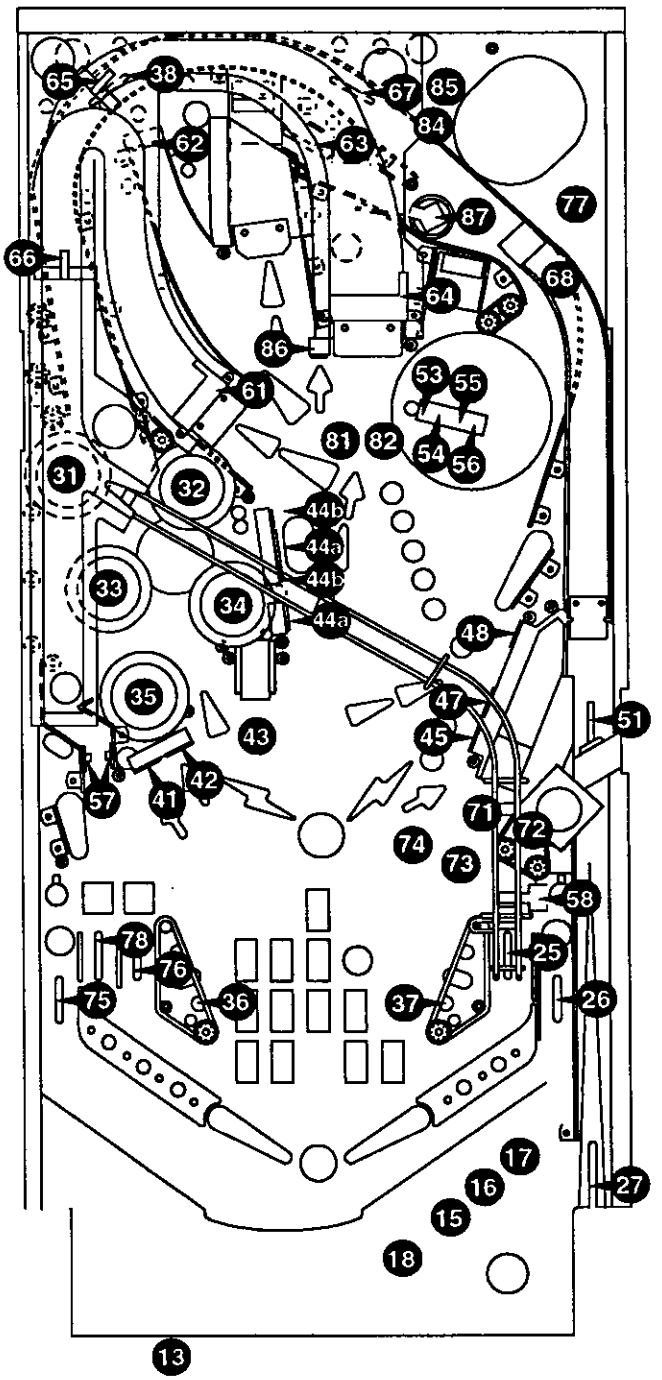

* Not shown.
† Located on underside of playfield.

LAMP LOCATIONS

Item No.	Bulb No.	Lamp Assy. No.	Description
11	24-8768	A-15114	Thing Multiball #555
12	24-8768	A-15114	Extra Ball #555
13	24-8768	A-15114	Jackpot #555 (2)
14	24-6549	A-11754	Grave "A" #44
15	24-6549	A-11754	Stars #44
16	24-6549	A-11754	Super Jackpot #44
17	24-6549	A-11754	Grave "V" #44
18	24-6549	A-11271	Upper Swamp Million #44
21	24-8768	A-11199	Upper Left Jet #555
22	24-8768	A-11199	Upper Right Jet #555
23	24-8768	A-11199	Center Left Jet #555
24	24-8768	A-11199	Center Right Jet #555
25	24-8768	A-11199	Lower Jet #555
26	24-8768	A-15113	Cousin It #555 (2)
27	24-8768	A-15113	2 Bear Kicks #555
28	24-8768	A-15113	Thing Flips #555
31	24-8768	A-15112	G-R-E-E-D "G" #555
32	24-8768	A-15112	G-R-E-E-D "R" #555
33	24-8768	A-15112	G-R-E-E-D "E"-1 #555
34	24-8768	A-15112	G-R-E-E-D "E"-2 #555
35	24-8768	A-15112	G-R-E-E-D "D" #555
36	24-8768	A-15111	5X Graveyard #555
37	24-8768	A-15111	Center Swamp Million #555
38	24-8768	A-15111	Lower Swamp Million #555
41	---	---	Not Used
42	24-6549	A-11271	Advance X #44
43	24-6549	A-11754	Grave "G" #44
44	24-6549	A-11271	Grave "R" #44
45	24-6549	A-11271	The Mamushka #44
46	24-6549	A-11271	Swamp Lock #44
47	24-8768	---	Electric Chair Red #555
48	24-6549	A-11271	Grave "E" #44
51	24-8768	A-15110	Thing #555
52	24-8768	A-15110	Raise The Dead #555
53	24-8768	A-15110	Lite Extra Ball #555
54	24-8768	A-15110	House 6 Million #555
55	24-8768	A-15110	Quick Multiball #555 Fester's
56	24-8768	A-15110	Tunnel Hunt #555
57	24-8768	A-15110	House Seance #555
58	24-8768	A-15110	Hit Cousin It #555
61	24-6549	A-11271	Left Special #44
62	24-6549	A-11271	Lite Thing Flips 1 #44
63	24-6549	A-11271	Lite 2 Bear Kicks #44
64	24-8768	---	Electric Chair Yellow #555
65	24-6549	A-11271	House "?" #44
66	24-6549	A-11754	House 9 Million #44
67	24-8768	A-15110	Graveyard At Max #555
68	24-8768	A-15110	House 3 Million #555
71	24-6549	A-11271	Lite Advance X #44
72	24-6549	A-11271	Right Special #44
73	24-6549	A-11754	Shoot Again #44
74	24-8768	A-12887-B	Vault Green #555
75	24-8768	A-12887-B	Vault Red #555
76	---	---	Not Used
77	24-8768	---	Thing Yellow #555
78	24-8768	---	Thing Green #555
81	24-8768	D-12501	"Thing" ""-1 #555
82	24-8768	D-12501	"Thing" "T" #555
83	24-8768	D-12501	"Thing" "H" #555
84	24-8768	D-12501	"Thing" "I" #555
85	24-8768	D-12501	"Thing" "N" #555
86	24-8768	D-12501	"Thing" "G" #555
87	24-8768	D-12501	"Thing" ""-2 #555
88	---	20-9663-1	Credit Button

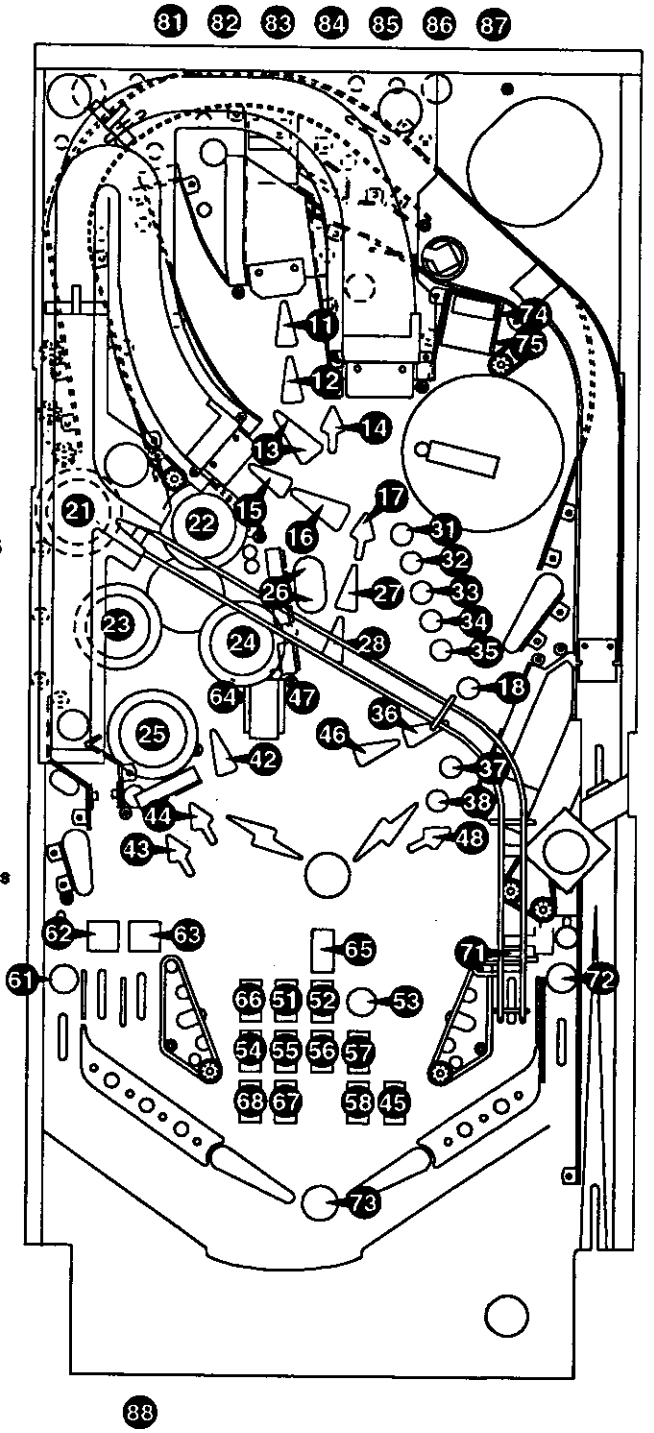

* Located in Speaker Panel

SOLENOID/FLASHER LOCATIONS

Item	Coil/Flasher Number	Assy. No.	Description
01	AE-26-1200	A-15115	†Chair Kickout
02	AE-23-800	A-15267	¶Thing Knocker
03	AE-26-1500	A-15040	Ramp Diverter
04	AE-26-1200	B-9362-L-2	Ball Release
05	AE-27-1200	A-8039-3	Outhole
06	---	A-12158-1	Thing Magnet
07	AE-23-800	A-15200	†Thing Kickout
08	AE-26-1200	A-14107	†Lockup Kickout
09	AE-26-1200	A-9415-2	Upper Left Jet
10	AE-26-1200	A-9415-2	Upper Right Jet
11	AE-26-1200	A-9415-2	Center Left Jet
12	AE-26-1200	A-9415-2	Center Right Jet
13	AE-26-1200	A-9415-2	Lower Jet
14	AE-27-1200	A-14369-L	Left Slingshot
15	AE-27-1200	A-14369-L	Right Slingshot
16	20-9247	---	†Left Magnet 12V
17	24-8802 #906	---	Flasher #1 (2)
18a	24-8802 #906	---	Flasher #2 (2)
19a	24-8802 #906	A-12336-1	Flasher #3 (2)
b	24-8802 #906	---	
20a	24-8802 #906	A-12336-1	Flasher #4
b	24-8802 #906	---	
21a	24-8802 #906	A-12336-1	Flasher #5
b	24-8802 #906	---	
22a	24-8802 #906	A-12336-1	Flasher #6
b	24-8802 #906	---	« (3)
23	20-9247	---	†Upper Magnet 12V
24	20-9247	---	†Right Magnet 12V
25	14-7966	A-14711	Thing Motor 12V
26	AE-27-1200	A-15368	Thing Eject Hole
27	14-7969 12V	A-14970-1	Bookcase Motor
28	AE-30-2000	A-15367	†Swamp Release

General Illumination Circuits

*01	24-6549	A-11905	Left Playfield String #44
*02	24-8768	---	Insert House String #555
*03	24-8768	---	Insert People String #555
*04	---	---	Not Used
*05	24-6549	A-11905	Right Playfield String #44

*	FL-11753	A-15849-L-1	Upper Left Flipper Assy.
*	FL-11630	A-15849-R	Upper Right Flipper Assy.
*	FL-15411	A-15849-L-4	Lower Left Flipper Assy.
*	FL-15411	A-15849-R-4	Lower Right Flipper Assy.

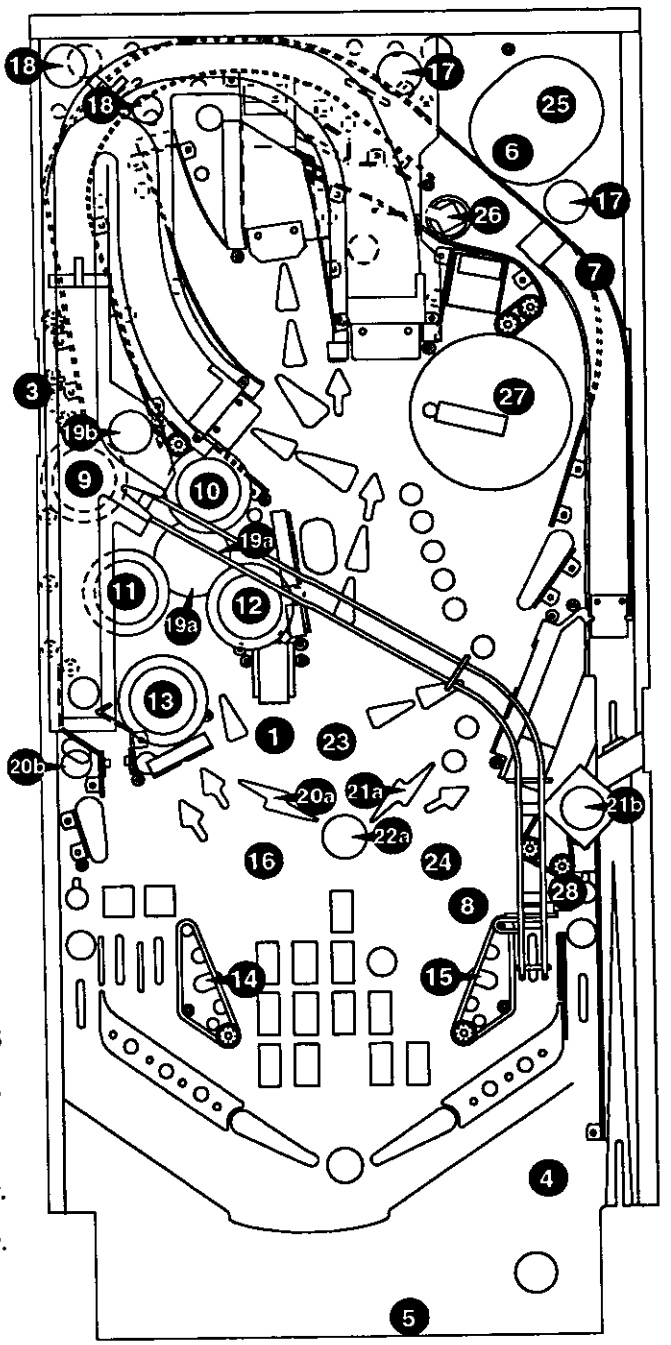

*** Not shown.**
† Located on bottom of playfield.
¶ Located in cabinet.
« Located on top of backbox.

RUBBER RINGS

ITEM	PART NO.	QTY	DESCRIPTION
A.	23-6300	6	5/16" Rubber Ring
B.	23-6301	6	3/4" Rubber Ring
C.	23-6304	2	1 1/2" Rubber Ring
D.	23-6305	4	2" Rubber Ring
E.	23-6519-4	3	Fipper Rubber, Red
F.	23-6535	9	Rubber Bumper
G.	23-6552	1	Rubber Bumper, Yellow
H.	23-6553-4	1	Small Flipper Rubber, Red
I.	23-6556	9	Rubber Sleeve, Black
J.	23-6579	1	3/4" Tapered Bumper, Yellow
	03-7973	1	Nylon Spacer
K	23-6629	2	Rubber Pad, Blue
L.	23-6674	1	Rubber Pad, Blue

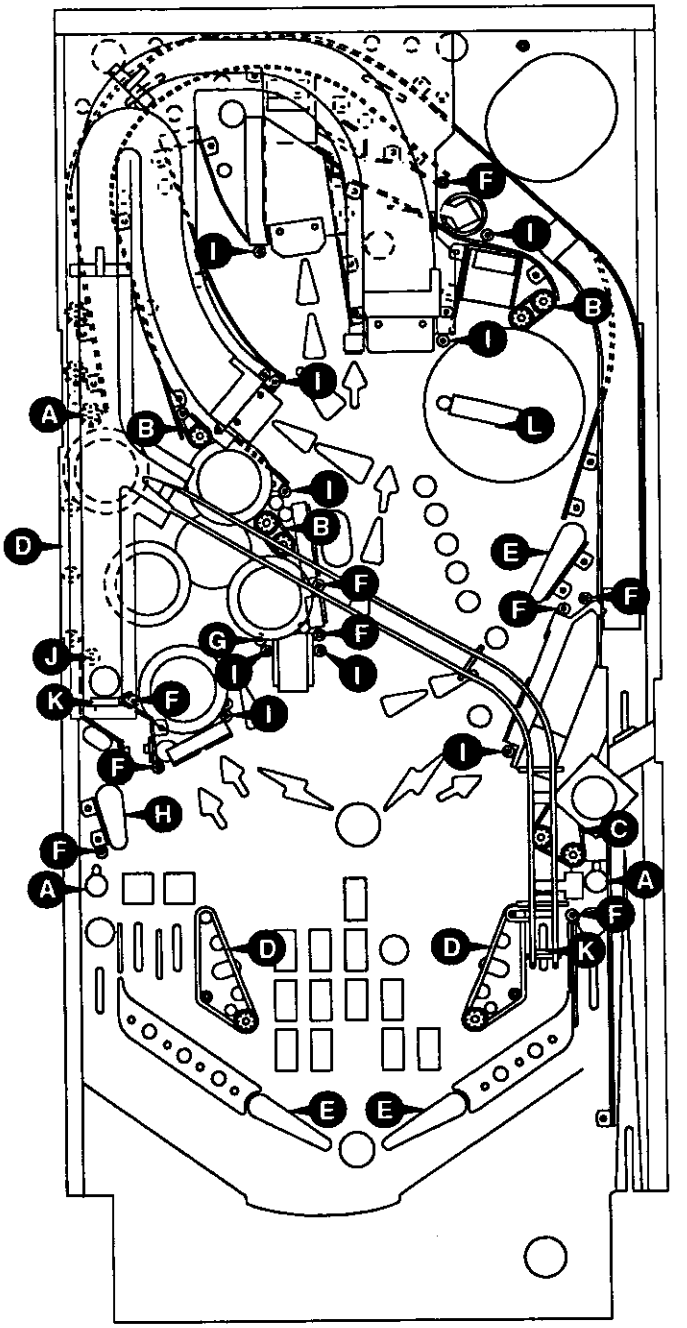

RAMPS

ITEM	PART NO.	DESCRIPTION
1	02-4436-7	8-32 x 1 1/2" Standoff
	A-12258-2	8-32 Stud Plate Assy.
2	A-15047	Main Ramp Assy.
3	A-14265-13	Receptacal & Skirt Assy.
	03-8171-9	Mini Dome, Red
4	5647-12693-21	Switch
5	A-14492	Ball Gate Assy.
6	A-13627-2	Ball Gate Assy.
7	02-4436-5	8-32 x 2.83" Standoff
	A-12258-2	8-32 Stud Plate Assy.
8	A-15150	Window Ramp Assy.
9	02-4611-1	8-32 x 3 1/2" Standoff
10	A-14973	Shooter Ramp Assy.
11	A-14972-1	Crossover Wire Ramp Assy.
	12-7006-1	Wire Ramp Brass
12	A-14265-13	Receptacal & Skirt Assy.
	03-8171-13	Mini Dome, Clear
13	02-4436-15	8-32 x 1 7/8" Standoff
14	5647-12693-21	Switch
15	A-15070	*Chute Ramp Assy.
	5647-12693-08	Micro Switch

*** Located under playfield.**

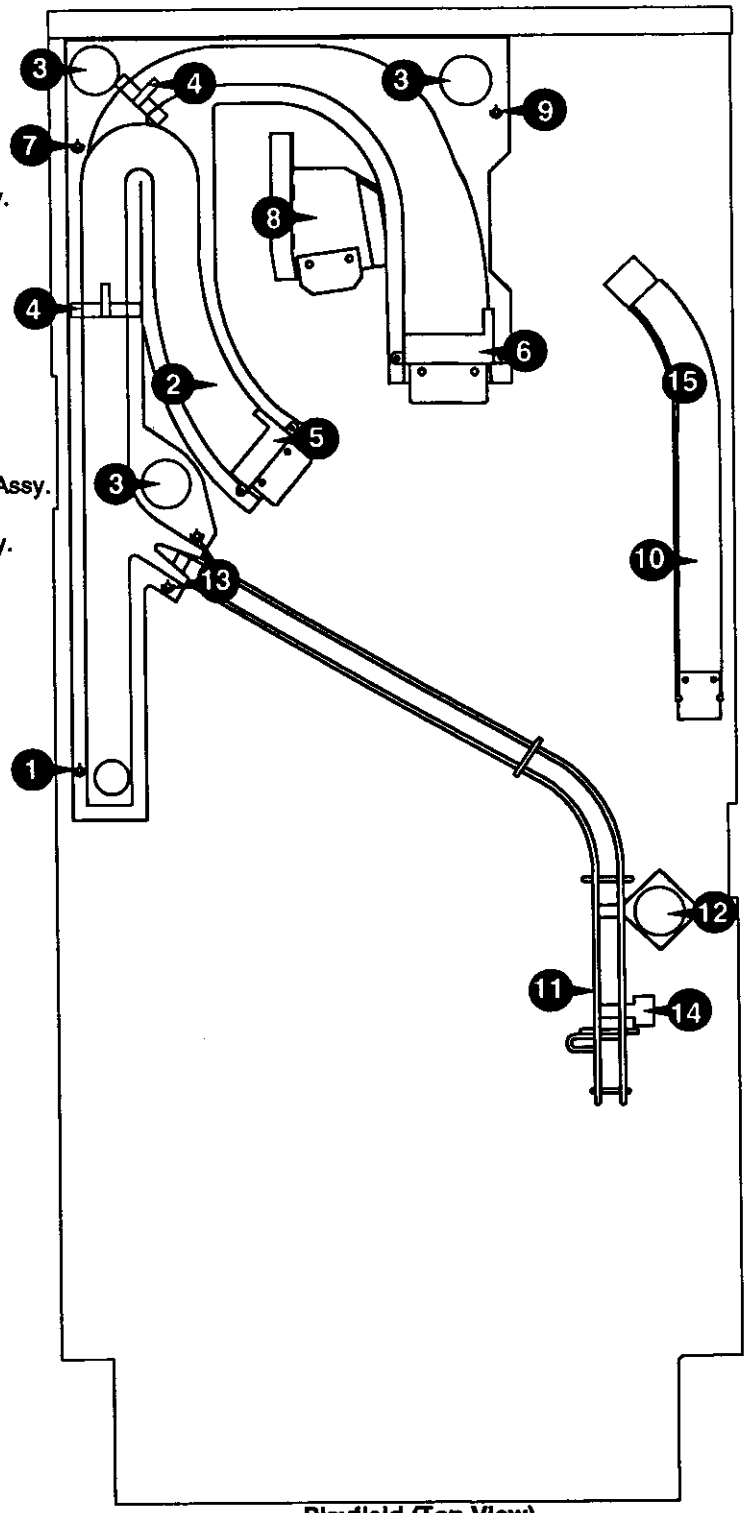

Playfield (Top View)

Notes

Section 3

Wiring Diagrams and Schematics

CONNECTOR & COMPONENT IDENTIFICATION

Each plug or jack receives a number that identifies the circuit board and position on that board that it connects to. J-designations refer to the male part of a connector. P-designations refer to the female part of a connector. For example, J101 designates jack 1 of board 1 (a Power Driver Board Board jack); P206 designates plug 6 of board 2 (a CPU Board plug). Identifying the specific pin number of a connector involves a hyphen, which separates the pin number from the plug or jack designation. For example, J101-3 refers to pin 3 of jack 1 on board 1.

Other game components may also have similar numbers to clarify their locations or related circuits. For example, F501 refers to a fuse located on the Sound Board.

Prefix numbers for the WPC circuit boards are listed below.

1- Power Driver Board
2- CPU Board
5- Sound Board
6- Dot Matrix Controller
Dot Matrix Display/Driver Board
8 - Flipper Controller Board
9 - Extra Flipper Supply Board

LAMP MATRIX

The ADDAMS FAMILY Lamp Matrix

Column / Row	1 Yellow-Brown J137-1 Q98	2 Yellow-Red J137-2 Q97	3 Yellow-Orange J137-3 Q96	4 Yellow-Black J137-4 Q95	5 Yellow-Green J137-5 Q94	6 Yellow-Blue J137-6 Q93	7 Yellow-Violet J137-7 Q92	8 Yellow-Gray J138-9 Q91
1 Red-Brown J133-1 Q90	Thing Multiball 11	Upper Left Jet 21	G-R-E-E-D "G" 31	Not Used 41	Thing 51	Left Special 61	Lite Advance X 71	*Thing* "*"-1 81
2 Red-Black J133-2 Q89	Extra Ball 12	Upper Right Jet 22	G-R-E-E-D "R" 32	Advance X 42	Raise The Dead 52	Lite Thing Flips 62	Right Special 72	*Thing* "T" 82
3 Red-Orange J133-4 Q88	Jackpot 13	Center Left Jet 23	G-R-E-E-D "E"-1 33	Grave "G" 43	Lite Extra Ball 53	Lite 2 Bear Kicks 63	Shoot Again 73	*Thing* "H" 83
4 Red-Yellow J133-5 Q87	Grave "A" 14	Center Right Jet 24	G-R-E-E-D "E"-2 34	Grave "R" 44	House 6 Million 54	Electric Chair Yellow 64	Vault Green 74	*Thing* "I" 84
5 Red-Green J133-6 Q86	Stars 15	Lower Jet 25	G-R-E-E-D "D" 35	The Mamushku 45	Quick Multiball 55	House "?" 65	Vault Red 75	*Thing* "N" 85
6 Red-Blue J133-7 Q85	Super Jackpot 16	Cousin It 26	5X Graveyard 36	Swamp Lock 46	Fester's Tunnel Hunt 56	House 9 Million 66	Not Used 76	*Thing* "G" 86
7 Red-Violet J133-8 Q84	Grave "V" 17	2 Bear Kicks 27	Center Swamp Million 37	Electric Chair Red 47	House Seance 57	Graveyard At Max 67	Thing Yellow 77	*Thing* "*"-2 87
8 Red-Gray J133-9 Q83	Upper Swamp Million 18	Thing Flips 28	Lower Swamp Million 38	Grave "E" 48	Hit Cousin It 58	House 3 Million 68	Thing Green 78	Credit Button 88

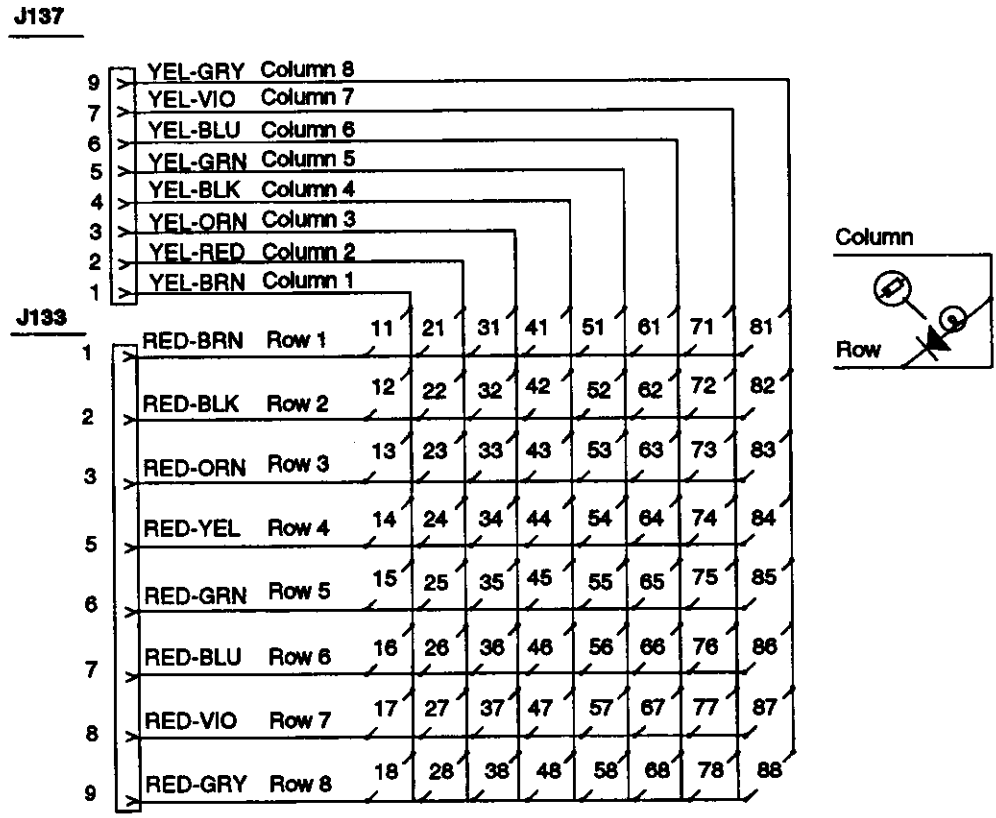

Lamp Circuit

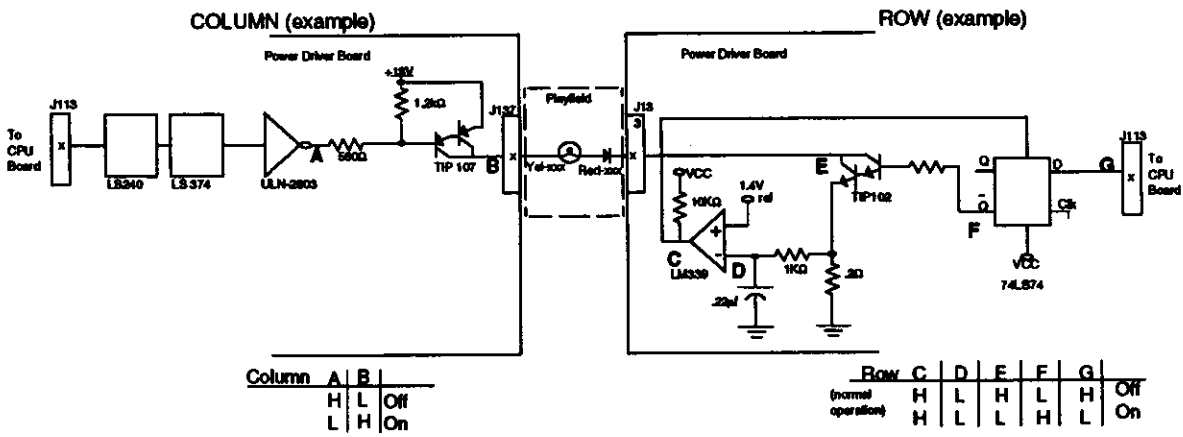

SWITCH MATRIX

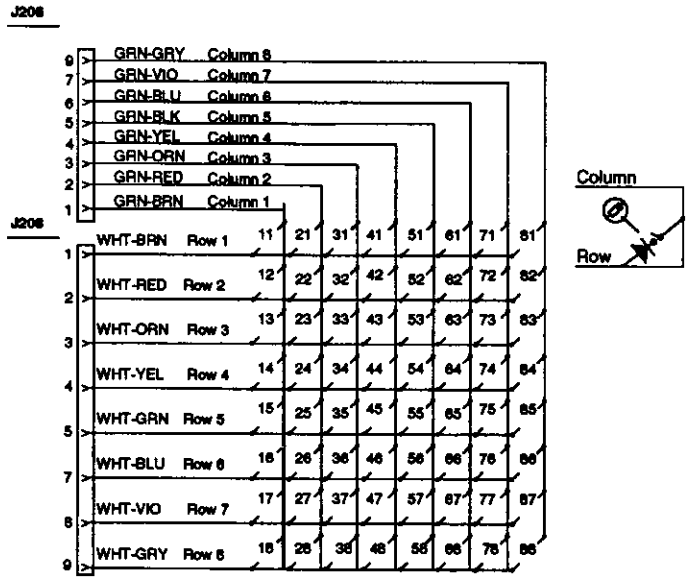

The ADDAMS FAMILY Switch Matrix

White — Green

Dedicated Grounded Switches	Row \ Column	1 Green-Brown J206-1 U20-18	2 Green-Red J206-2 U20-17	3 Green-Orange J206-3 U20-16	4 Green-Yellow J206-4 U20-15	5 Green-Black J206-5 U20-14	6 Green-Blue J206-6 U20-13	7 Green-Violet J206-7 U20-12	8 Green-Gray J206-8 U20-11	Flipper Grounded Switches
Orange-Brown J205-1 Left Coin Chute (1) D1	1 White-Brown J206-1 U19-11	Buy In 11	Slam Tilt 21	Upper Left Jet 31	Grave "G" 41	Shooter Lane 51	Left Ramp Enter 61	Swamp Lock Upper 71	Bookcase Open 81	Black-Green J806-1 Right Flipper End of Stroke F1
Orange-Red J205-2 Center Coin Chute (2) D2	2 White-Red J206-2 U19-9	Not Used 12	Coin Door Closed 22	Upper Right Jet 32	Grave "R" 42	Not Used 52	Train Wreck 62	Swamp Lock Center 72	Bookcase Closed 82	Blue-Violet J805-1 Right Flipper Button F2
Orange-Black J205-3 Right Coin Chute (3) D3	3 White-Orange J206-3 U19-5	Start Button 13	Ticket Opto. 23	Center Left Jet 33	Chair Kickout 43	Bookcase Opto 1 53	Thing Eject Lane 63	Swamp Lock Lower 73	Not Used 83	Black-Blue J806-3 Left Flipper End of Stroke F3
Orange-Yellow J205-4 4th Coin Chute (4) D4	4 White-Yellow J206-4 U19-7	Plumb Bob Tilt 14	Always Closed 24	Center Left Jet 34	Cousin It 44	Bookcase Opto 2 54	Right Ramp Enter 64	Lockup Kickout 74	Thing Down Opto 84	Blue-Gray J805-2 Left Flipper Button F4
Orange-Green J205-6 Normal Function Service Credits; Test Function Escape (5) D5	5 White-Green J206-5 U19-11	Left Trough 15	Right Flipper Lane 25	Lower Jet 35	Lower Swamp Million 45	Bookcase Opto 3 55	Right Ramp Top 65	Left Outlane 75	Thing Up Opto 85	Black-Violet J806-4 Upper Right Flipper End of Stroke F5
Orange-Blue J205-7 Normal Function Volume Down; Test Function Down (6) D6	6 White-Blue J206-7 U19-9	Center Trough 16	Right Outlane 26	Left Slingshot 36	Not Used 46	Bookcase Opto 4 56	Left Ramp Top 66	Left Flipper Lane 2 76	Grave "A" 86	Black-Yellow J805-3 Upper Right Flipper Button F6
Orange-Violet J205-8 Normal Function Volume Up; Test Function Up (7) D7	7 White-Violet J206-8 U19-5	Right Trough 17	Ball Shooter 27	Right Slingshot 37	Center Swamp Million 47	Bumper Lane Opto 57	Upper Right Loop 67	Thing Kickout 77	Thing Eject Hole 87	Black-Gray J806-5 Upper Left Flipper End of Stroke F7
Orange-Gray J205-9 Normal Function Begin Test; Test Function Enter (8) D8	8 White-Gray J206-9 U19-7	Outhole 18	Not Used 28	Upper Left Loop 38	Upper Swamp Million 48	Right Ramp Exit 58	Vault 68	Left Flipper Lane 1 78	Not Used 88	Black-Blue J805-5 Upper Left Flipper Button F8

Switch Matrix Circuit

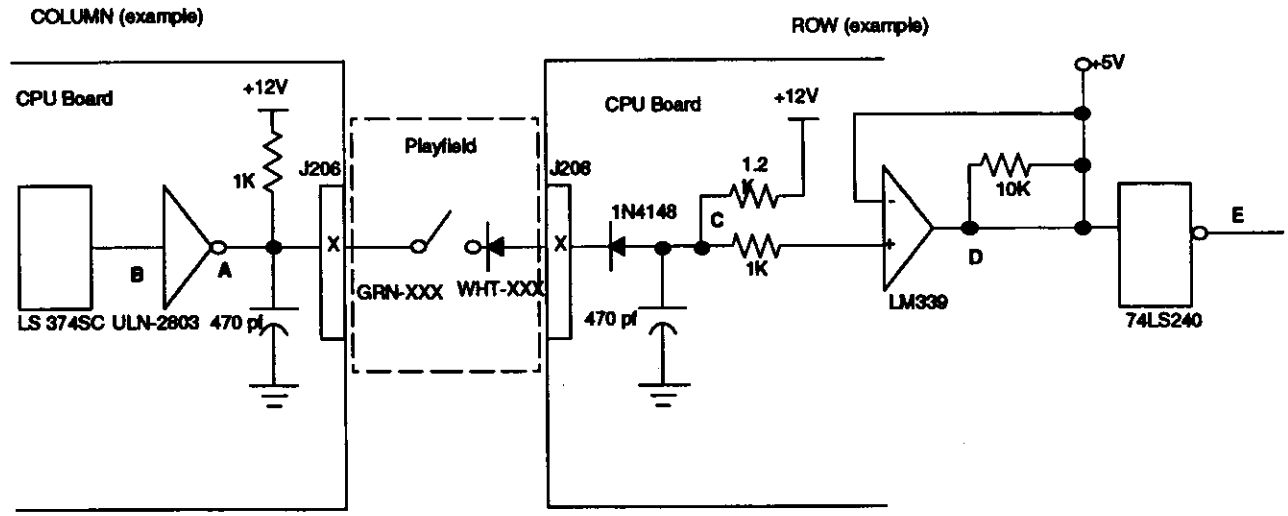

Column	A	B	
Inactive	H	L	Off
Active	L	H	On

Switch	C	D	
Open	H	H	Off
Closed	L	L	On

Dedicated Switch Circuit

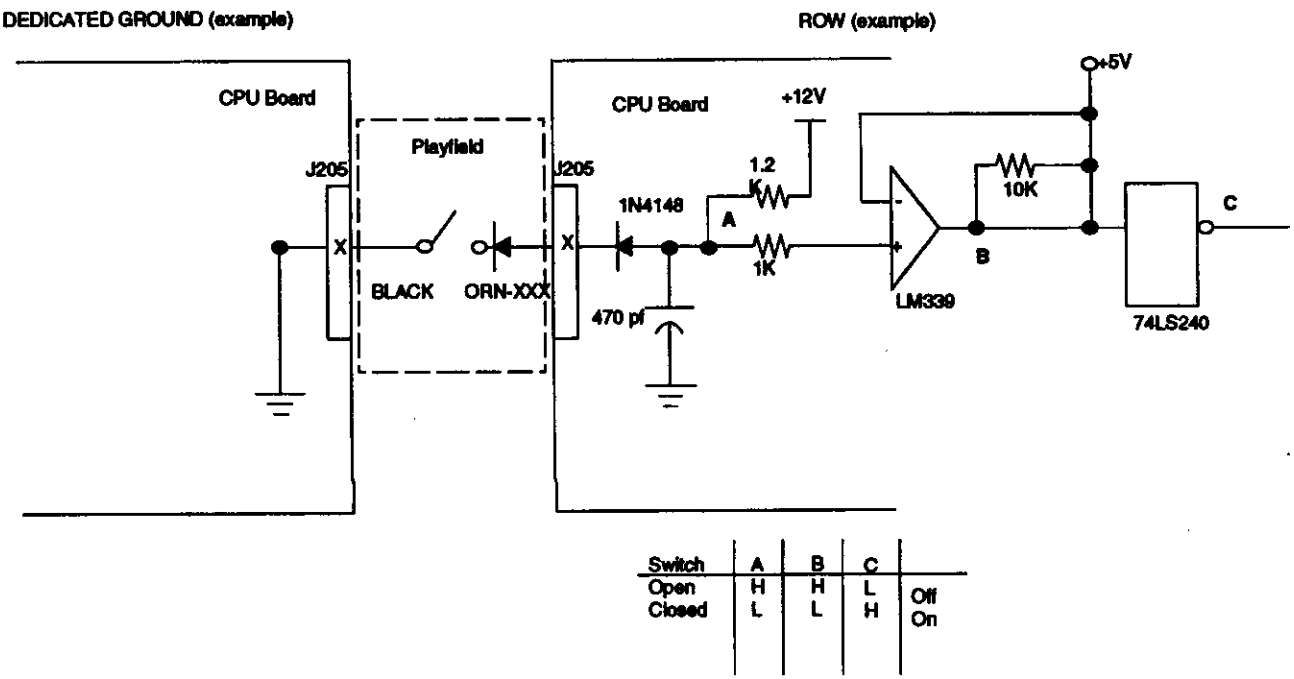

Switch	A	B	C	
Open	H	H	L	Off
Closed	L	L	H	On

SOLENOID/FLASHER TABLE

Sol. No.	Function	Solenoid Type	Wire Color	Connection	Driver Trnstr	Solenoid/Flashlamp Type
01	Chair Kickout	High Power	Vio-Brn	J130-1	Q82	AE-26-1200
02	Thing Knocker	High Power	Vio-Red	J132-2	Q80	AE-23-800
03	Ramp Diverter	High Power	Vio-Orn	J130-4	Q78	AE-26-1500
04	Ball Release	High Power	Vio-Yel	J130-5	Q76	AE-26-1200
05	Outhole	High Power	Vio-Grn	J130-6	Q64	AE-27-1200
06	Thing Magnet	High Power	Vio-Blu	J130-7	Q66	A-12158-1
07	Thing Kickout	High Power	Vio-Blk	J130-8	Q68	AE-23-800
08	Lockup Kickout	High Power	Vio-Gry	J130-9	Q70	AE-26-1200
09	Upper Left Jet	Low Power	Brn-Blk	J127-1	Q58	AE-26-1200
10	Upper Right Jet	Low Power	Brn-Red	J127-3	Q56	AE-26-1200
11	Center Left Jet	Low Power	Brn-Org	J127-4	Q54	AE-26-1200
12	Center Right Jet	Low Power	Brn-Yel	J127-5	Q52	AE-26-1200
13	Lower Jet	Low Power	Brn-Grn	J127-6	Q50	AE-26-1200
14	Left Slingshot	Low Power	Brn-Blu	J127-7	Q48	AE-27-1200
15	Right Slingshot	Low Power	Brn-Vio	J127-8	Q46	AE-27-1200
16	Left Magnet*	Low Power	Brn-Gry	J127-9	Q44	20-9247 12V
17	Telephone/Upper Right Ramp	Flasher	Blk-Brn	J126-1 J125-1	Q42	#906
18	Train/Upper Left Ramp	Flasher	Blk-Red	J126-2 J125-2	Q40	#906
19	Lower Ramp/Jet Bumpers (2)	Flasher	Blk-Org	J126-3 J125-3	Q38	#906
20	Left Lightning Bolt/Mini Flipper	Flasher	Blk-Yel	J126-4 J125-5	Q36	#906
21	Right Lightning Bolt/Swamp	Flasher	Blu-Grn	J126-5 J125-6	Q28	#906
22	The Power/Backbox Clowd (3)	Flasher	Blu-Blk	J126-6 J125-7	Q30	#906
23	Upper Magnet*	Low Power	Blu-Vio	J126-7 J125-8	Q34	20-9247 12V
24	Right Magnet*	Low Power	Blu-Gry	J126-8 J125-9	Q32	20-9247 12V
25	Thing Motor	Flasher	Blu-Brn	J122-1	Q26	14-7966 12V
26	Thing Eject Hole	Flasher	Blu-Red	J122-2	Q24	AE-27-1200
27	Bookcase Motor	Flasher	Blu-Org	J122-3	Q22	14-7969 12V
28	Swamp Release	Flasher	Blu-Yel	J122-4	Q20	AE-30-2000
	G. I. Circuits					
01	Left Playfield String	G.I.	Brown	J120-1	Q18	#44
02	Insert House String	G.I.	Orange	J120-2	Q10	#555
03	Insert People String	G.I.	Yellow	J120-3	Q14	#555
04	Not Used	G.I.	Green	J121-5	Q16	
05	Right Playfield String	G.I.	Violet	J121-6	Q12	#44
	Upper Left Flipper		Gry-Yel	J109-5		FL-11753
	Upper Right Flipper		Blu-Yel	J109-7		FL-11630
	Lower Left Flipper		Gry-Yel	J109-5		FL-15411
	Lower Right Flipper		Blu-Yel	J109-7		FL-15411

*Magnet fuse is a 5 Amp S.B. located on the underside of the playfield.

High Power Solenoid Circuit

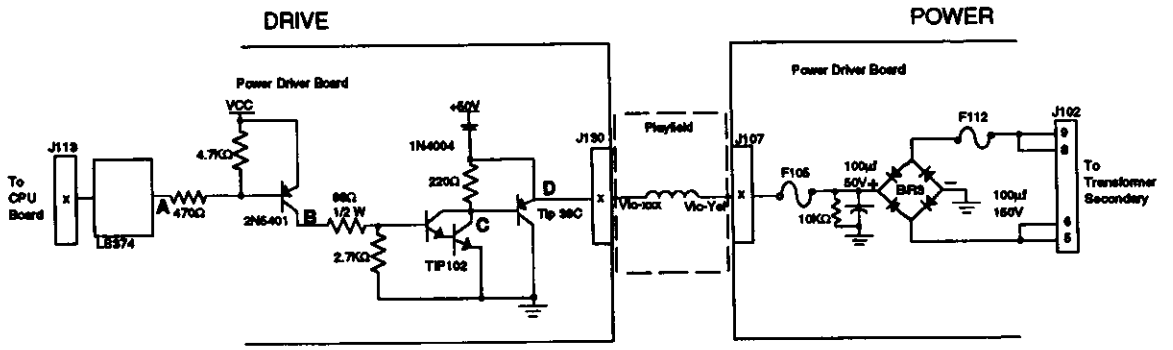

The microprocessor toggles the outpot of the 74LS374. When point "A" drops low, point "B" the collector of the 2N5401 transistor is high. A high at point "B" causes point "C" the collector of the TIP102 transistor, and point "D" the emitter of the TIP36 transistor to drop low. When point "D" is low the coil is grounded through the transistor and the coil turns On. The coil shuts Off when point "A" toggles high.

Low Power Solenoid Circuit

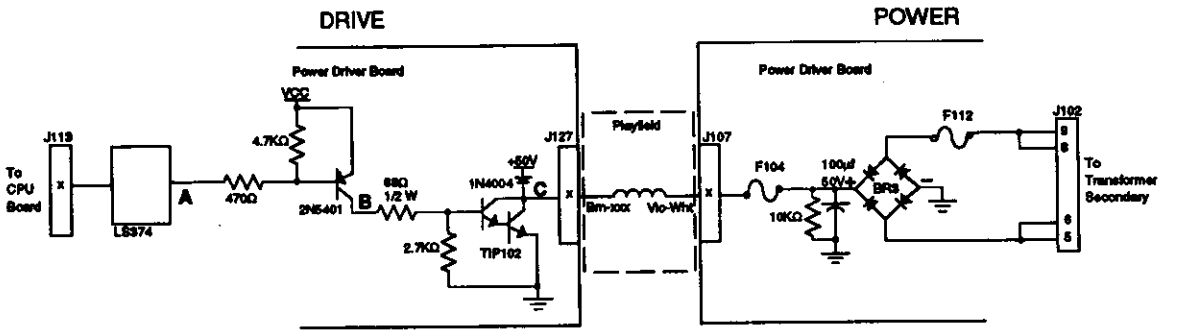

The microprocessor toggles the outpot of the 74LS374. When point "A" is low, point "B" the collector of the 2N5401 transistor is driven high. A high at point "B" turns On the TIP102 transistor and causes point "C" to drop low. When point "C" is low the coil is grounded through the transistor and the coil turns On. The coil shuts Off when point "A" toggles high.

Special (General Purpose) Solenoid Circuit

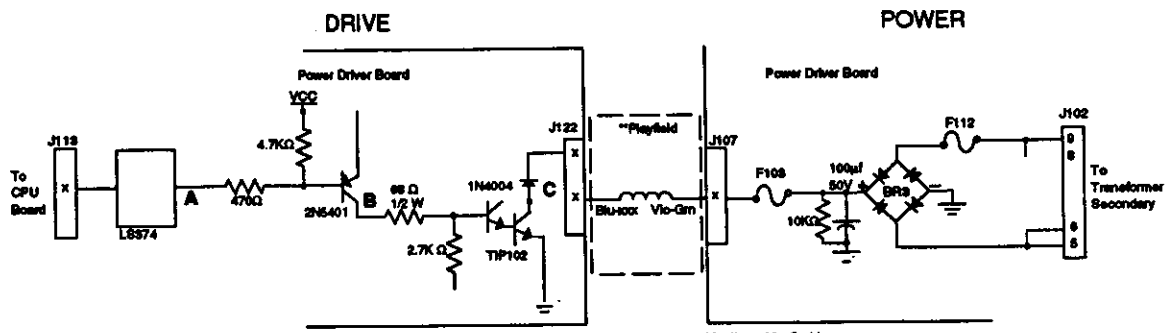

** Playfield Circuit When used for coil driver only (either +50V or +20V). If used for flashlamp driver see playfield circuit below. Flyback Diode is not used for flashlamp circuit.

The microprocessor toggles the output of the 74LS374. When point "A" drops low, point "B" is high. A high at point "B" causes a low at point "C". When point "C" is low the coil/flashlamp is grounded through the transistor and the coil/flashlamp turns On. When point "A" toggles high the coil/flashlamp turns Off.

Flashlamp Circuit

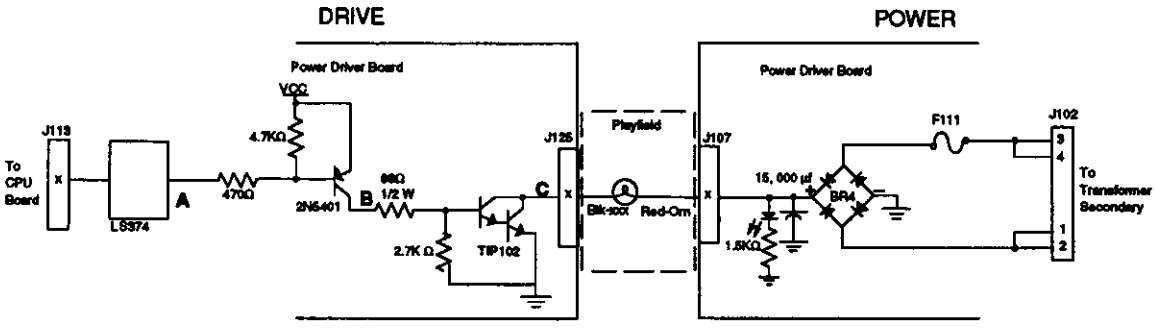

The Microprocessor toggles the output of the 74LS374. When point "A" is low, point "B" the collector of the 2N5401 transistor is high. Once point "B" is high, point "C" the collector of the TIP102 transistor is low. When Point "C" is low the flashlamp is grounded through the transistor and the flashlamp turns On. When point "A" toggles high the circuit shuts Off.

General Illumination

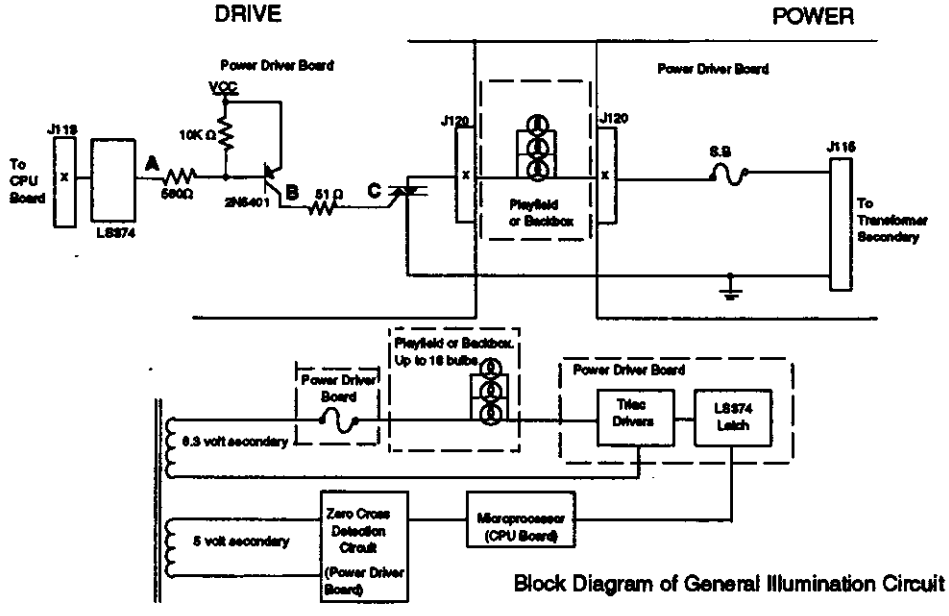

Block Diagram of General Illumination Circuit

When point "A" toggles low, then points "B" and "C" are high. This turns On the triac and the desired General Illumination string lights.

SOLENOID WIRING

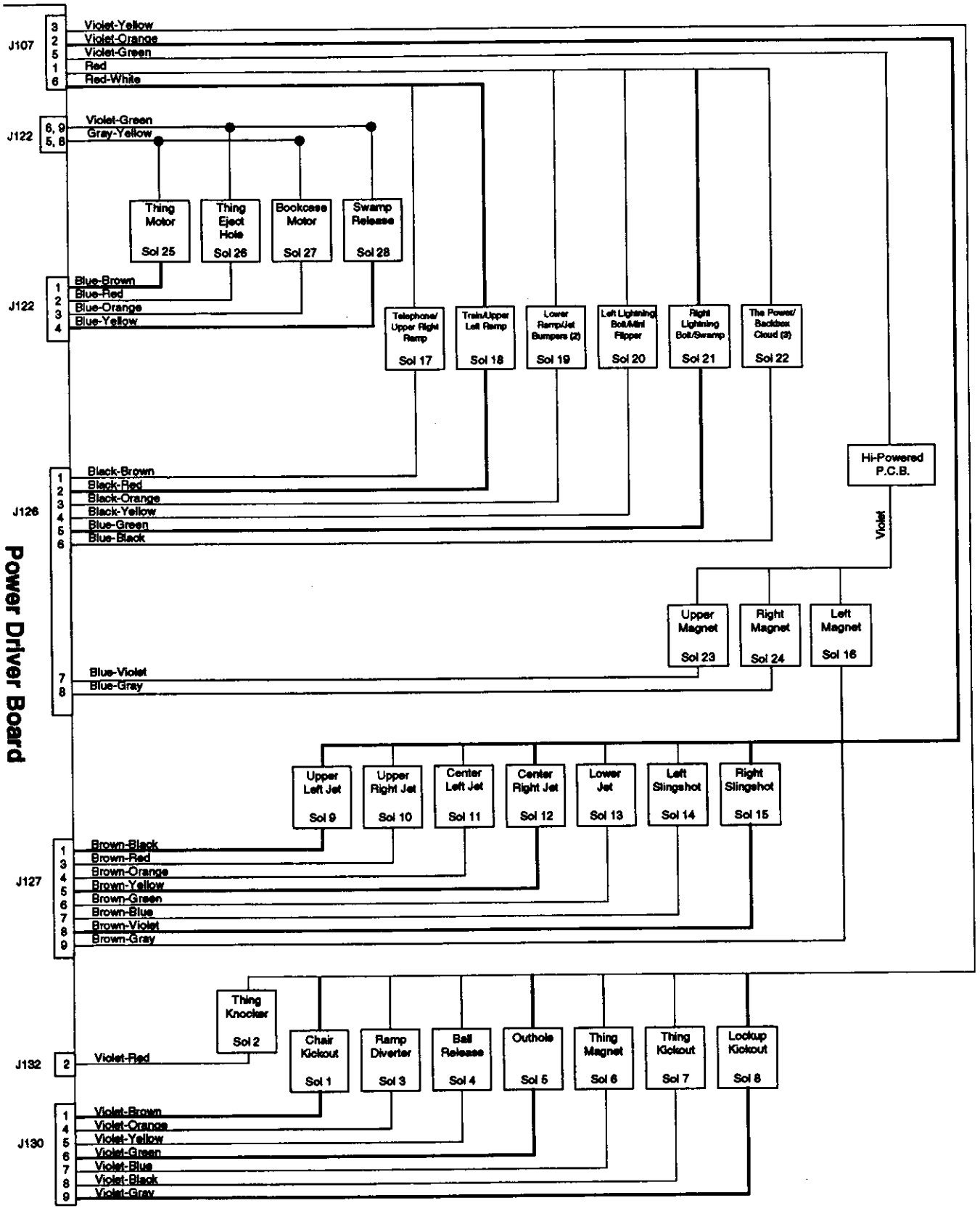

LEFT FLIPPER CIRCUIT

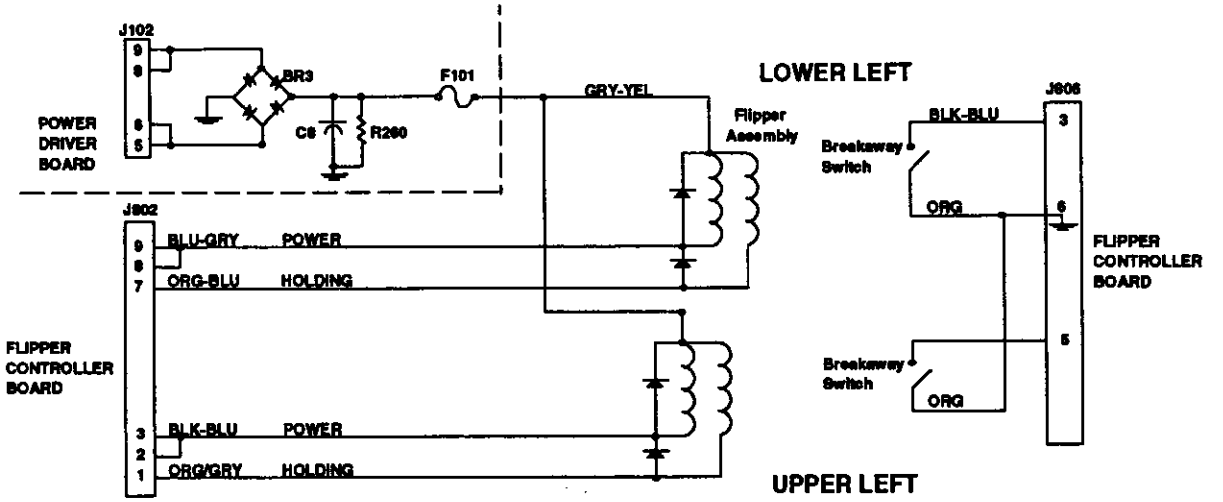

RIGHT FLIPPER CIRCUIT

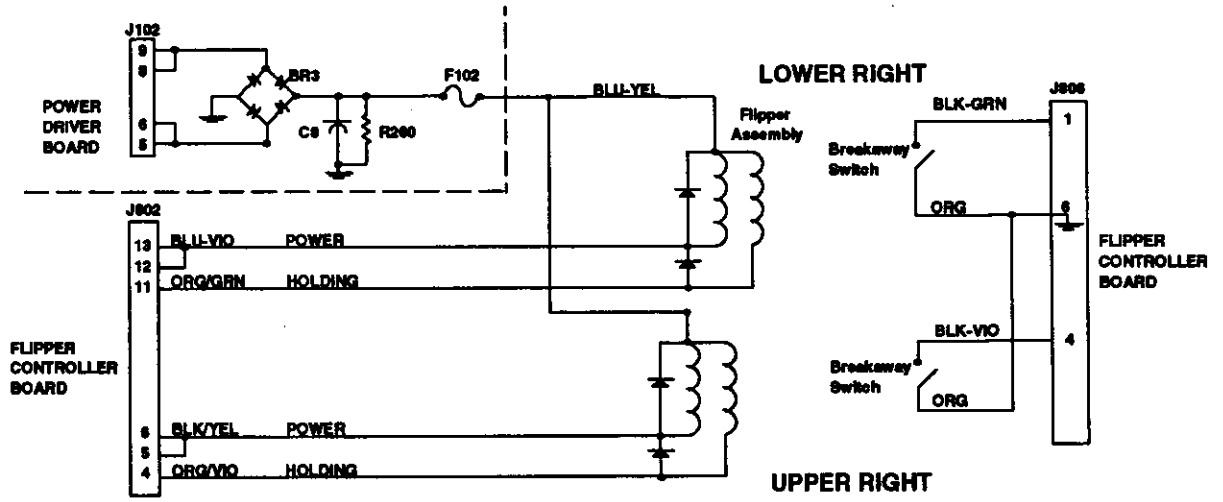

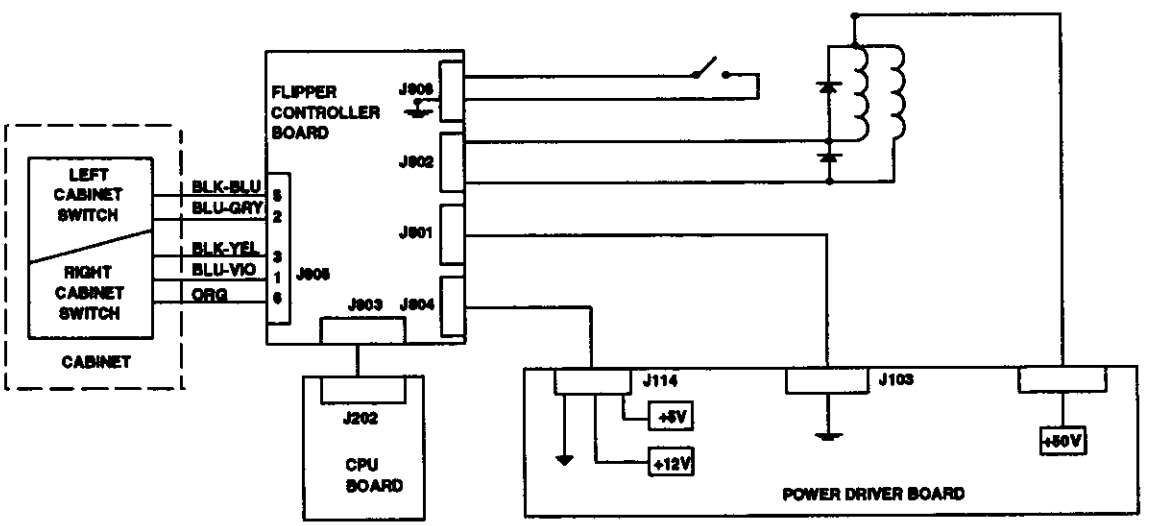

BLOCK DIAGRAM OF FLIPPER CIRCUIT

A-15416
Extra Flipper Supply Board & Schematic

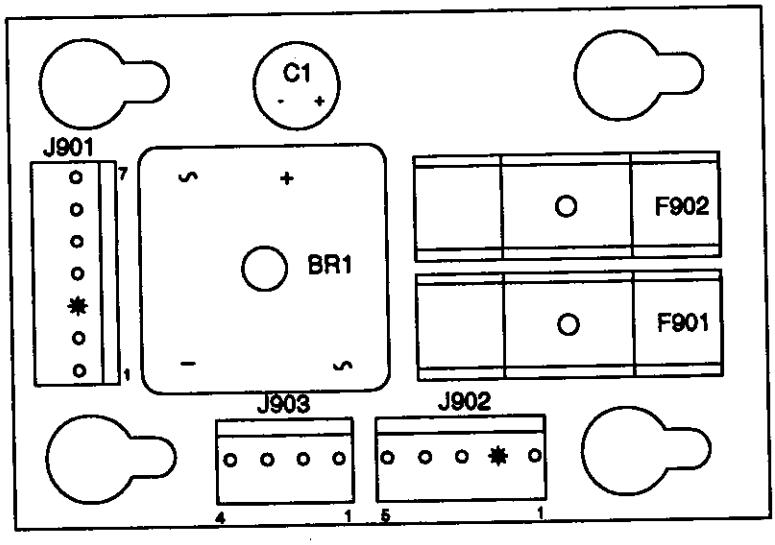

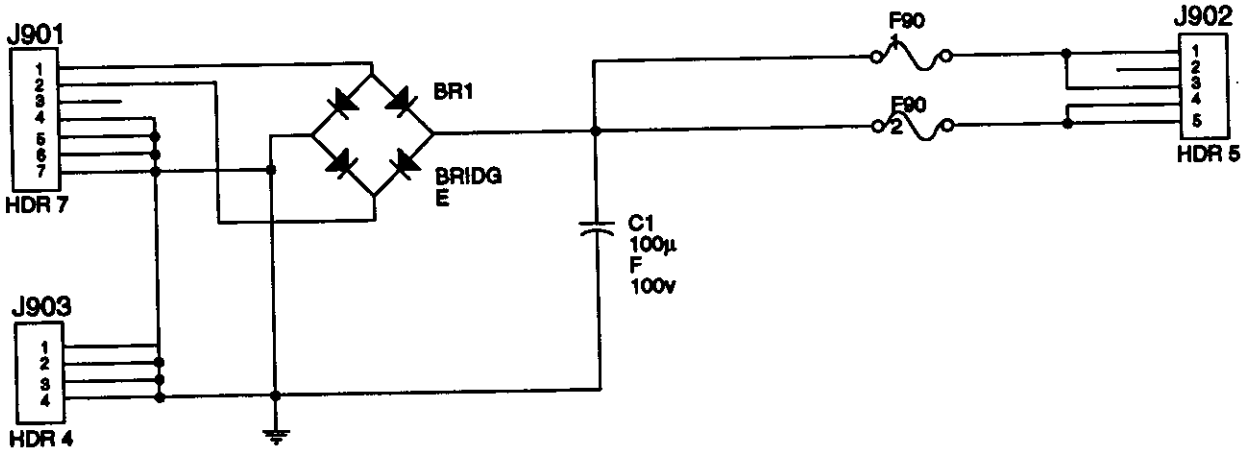

Flipper Opto PCB Assembly
A-17316

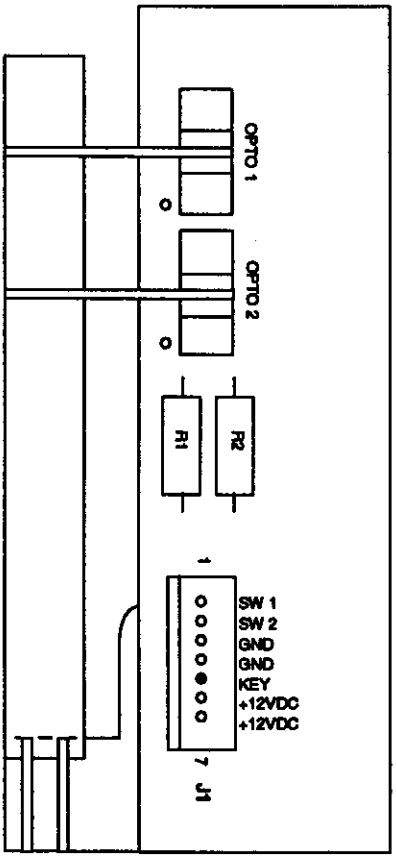

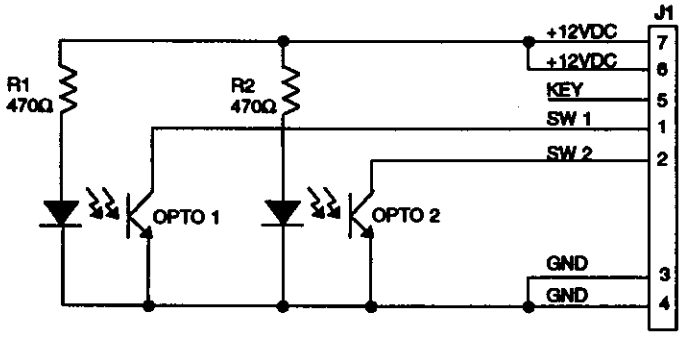

A-15542
Motor EMI Board & Schematic

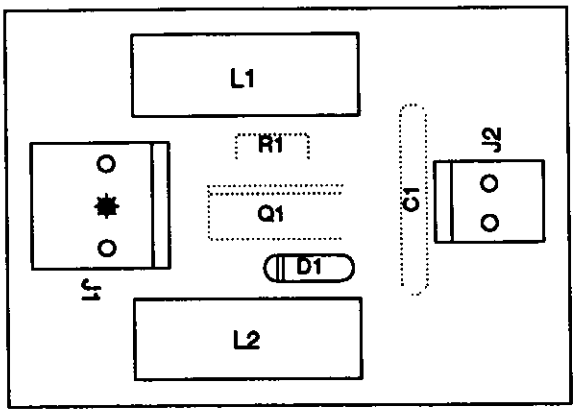

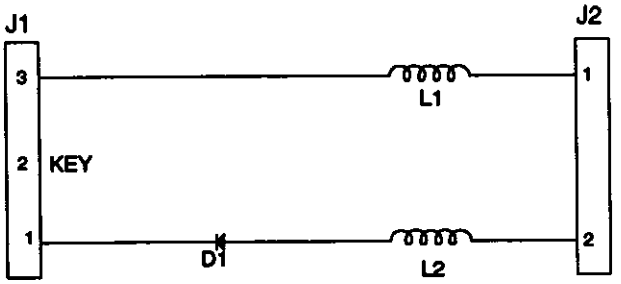

A-15018
4 I.R. LED Board & Schematic

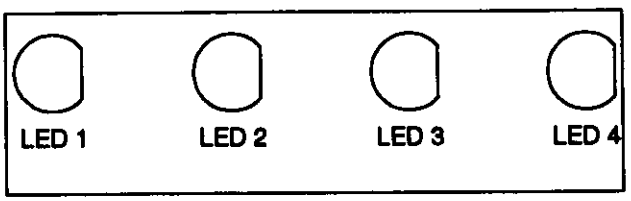

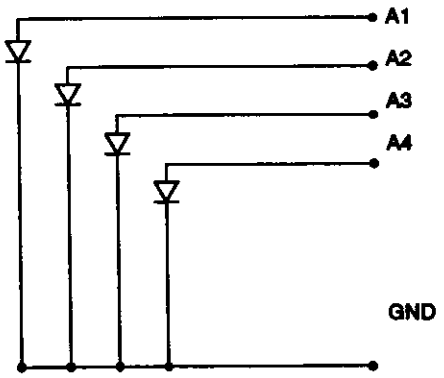

A-15017
4 -Opto Board & Schematic

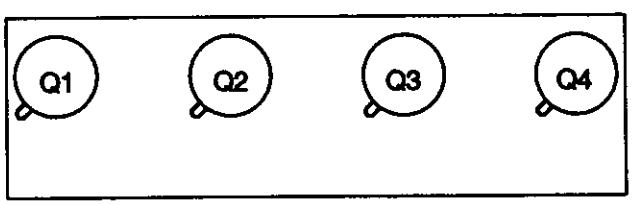

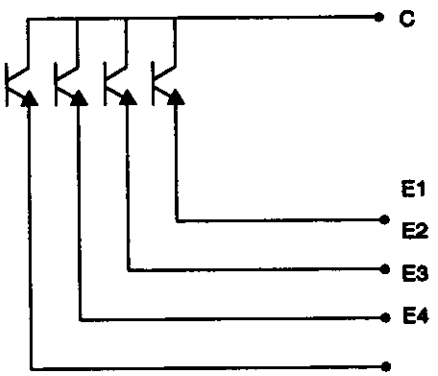

A-14977
7-Opto Switch Board & Schematic

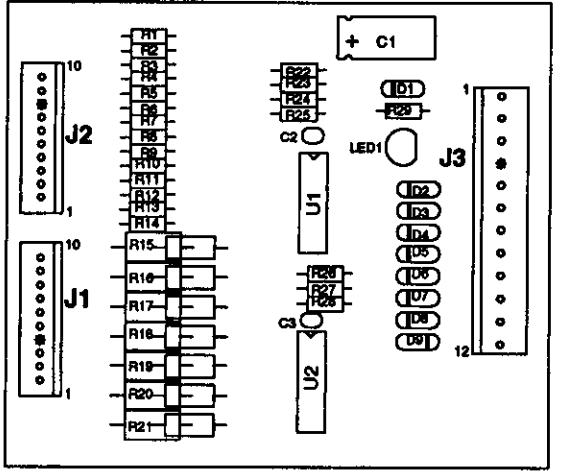

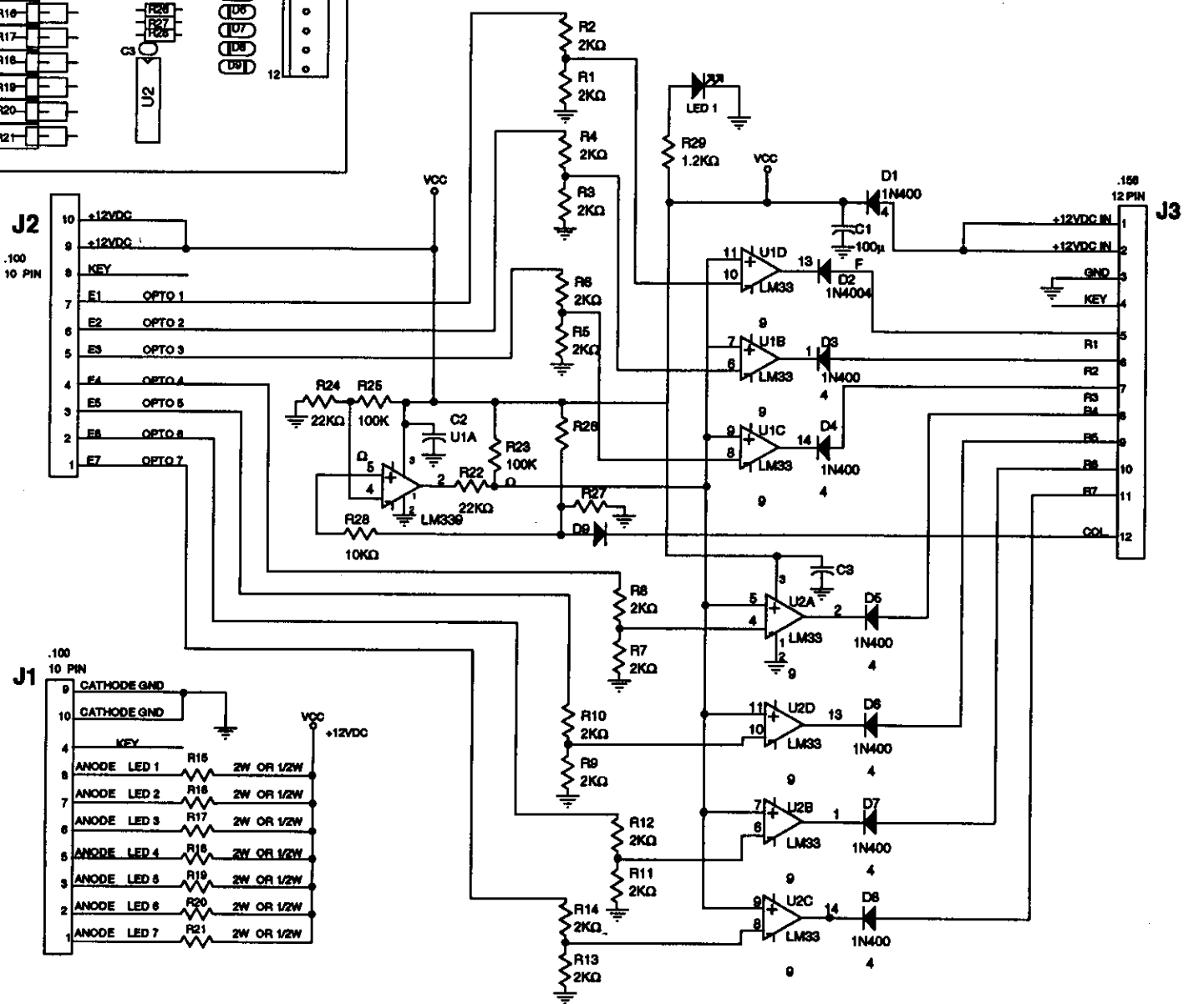

The ADDAMS FAMILY S.C.E. 3-14

A-15139
High Power Board & Schematic

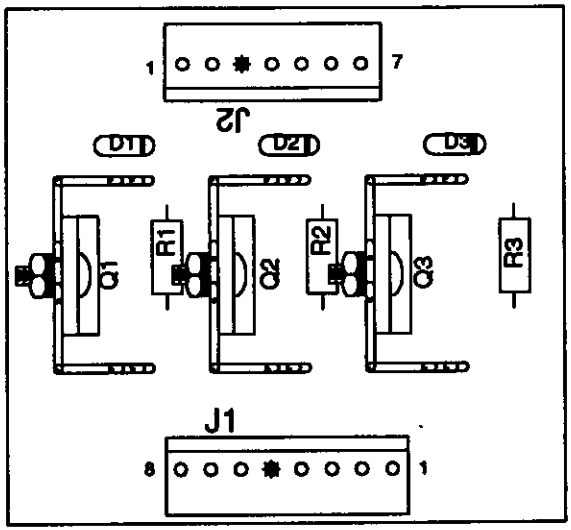

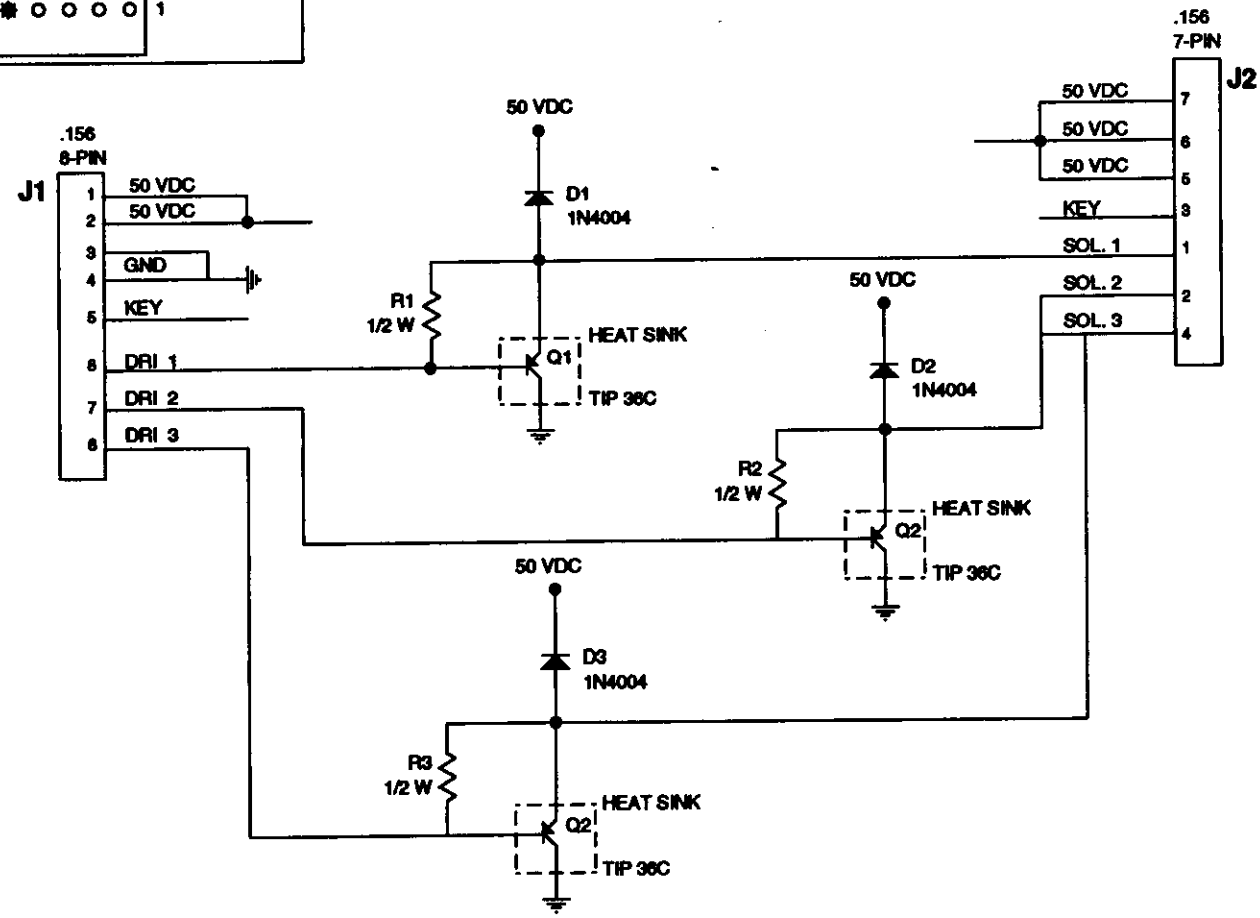

A-14689-1
Coin Door Interface Board Schematic

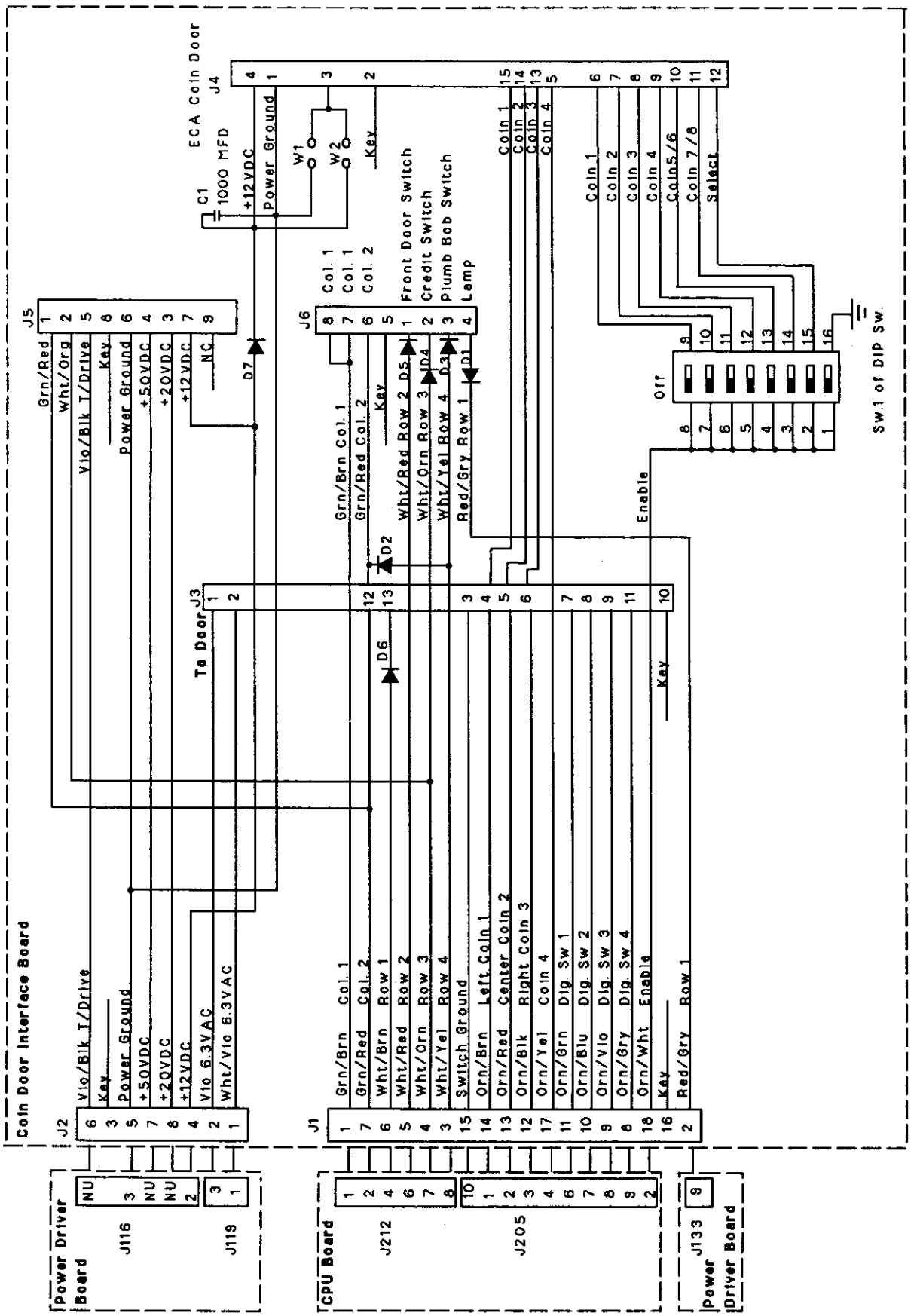

Switch Circuits

Connector From CPU:

Wire Color	Function		To Playfield	To Cabinet	I.C.'s
Green/Brown	Column 1		J206-1	J212-1	U20-18
Green/Red	Column 2		J206-2	J212-2	U20-17
Green/Orange	Column 3		J206-3		U20-16
Green/Yellow	Column 4		J206-4		U20-15
Green/Black	Column 5		J206-5		U20-14
Green/Blue	Column 6		J206-6		U20-13
Green/Violet	Column 7		J206-7		U20-12
Green/Gray	Column 8		J206-9		U20-11
White/Brown	Row 1		J208-1	J212-4	U18-11
White/Red	Row 2		J208-2	J212-6	U18-9
White/Orange	Row 3		J208-3	J212-7	U18-5
White/Yellow	Row 4		J208-4	J212-8	U18-7
White/Green	Row 5		J208-5		U19-11
White/Blue	Row 6		J208-7		U19-9
White/Violet	Row 7		J208-8		U19-5
White/Gray	Row 8		J208-9		U19-7
Orange/Brown	Direct 1	Left Coin		J205-1	U17-5
Orange/Red	Direct 2	Center Coin		J205-2	U17-7
Orange/Black	Direct 3	Right Coin		J205-3	U17-11
Orange/Yellow	Direct 4	4th Coin		J205-4	U17-9
Orange/Green	Direct 5	Escape/Service		J205-6	U16-9
Orange/Blue	Direct 6	Down/Vol. Down		J205-7	U16-11
Orange/Violet	Direct 7	Up/Vol. Up		J205-8	U16-7
Orange/Gray	Direct 8	Enter/Test		J205-9	U16-5
Black		Ground		J205-10	
Orange/White		Enable		J205-12	

Lamp Circuits

Connectors From Power Driver Board:

Wire Color	Function	To Playfield	To Cabinet	To Backbox	Transistor
Yellow/Brown	Column 1	J137-1			Q98
Yellow/Red	Column 2	J137-2			Q97
Yellow/Orange	Column 3	J137-3			Q96
Yellow/Black	Column 4	J137-4			Q95
Yellow/Green	Column 5	J137-5			Q94
Yelow/Blue	Column 6	J137-6			Q93
Yellow/Violet	Column 7	J137-7			Q92
Yellow/Gray	Column 8		J136-3	J138-9	Q91
Red/Brown	Row 1	J133-1	J134-1		Q90
Red/Black	Row 2	J133-2	J134-2		Q89
Red /Orange	Row 3	J133-4	J134-4		Q88
Red/Yellow	Row 4	J133-5	J134-5		Q87
Red/Green	Row 5	J133-6	J134-6		Q86
Red/Blue	Row 6	J133-7	J134-7		Q85
Red/Violet	Row 7	J133-8	J134-8		Q84
Red/Gray	Row 8	J133-9	J135-9		Q83

Solenoid Circuits

Connectors From Power Driver Board:

Wire Color	Function	To Backbox	To Playfield	Transistor
Violet/Brown	Solenoid 1, High Power		J130-1	Q82
Violet/Red	Solenoid 2, High Power		J132-2	Q80
Violet/Orange	Solenoid 3, High Power		J130-4	Q78
Violet/Yellow	Solenoid 4, High Power		J130-5	Q76
Violet/Green	Solenoid 5, High Power		J130-6	Q64
Violet/Blue	Solenoid 6, High Power		J130-7	Q66
Violet/Black	Solenoid 7, High Power		J130-8	Q68
Violet/Gray	Solenoid 8, High Power		J130-9	Q70
Brown/Black	Solenoid 9, Low Power		J127-1	Q58
Brown/Red	Solenoid 10, Low Power		J127-3	Q56
Brown/Orange	Solenoid 11, Low Power		J127-4	Q54
Brown/Yellow	Solenoid 12, Low Power		J127-5	Q52
Brown/Green	Solenoid 13, Low Power		J127-6	Q50
Brown/Blue	Solenoid 14, Low Power		J127-7	Q48
Brown/Violet	Solenoid 15, Low Power		J127-8	Q46
Brown/Gray	Solenoid 16, Low Power		J127-9	Q44
Black/Brown	Sol. 17, Flasher 1, No Diode	J125-1	J126-1	Q42
Black/Red	Sol. 18, Flasher 2, No Diode	J125-2	J126-2	Q40
Black/Orange	Sol. 19, Flasher 3, No Diode	J125-3	J126-3	Q38
Black/Yellow	Sol. 20, Flasher 4, No Diode	J125-5	J126-4	Q36
Blue/Green	Sol. 21, Special 1 Drive	J125-6	J126-5	Q28
Blue/Black	Sol. 22, Special 2 Drive	J125-7	J126-6	Q30
Blue/Violet	Sol. 23, Special 3 Drive	J125-8	J126-7	Q34
Blue/Gray	Sol. 24, Special 4 Drive	J125-9	J126-8	Q32
Blue/Brown	Sol. 25, Special 5 Drive		J122-1	Q26
Blue/Red	Sol. 26, Special 6 Drive		J122-2	Q24
Blue/Orange	Sol. 27, Special 7 Drive		J122-3	Q22
Blue/Yellow	Sol. 28, Special 8 Drive		J122-4	Q20
Gray/Yellow	Sol. 25 & 27, Tieback Diode		J122-5, 8	
Violet/Green	Sol. 26 & 28, Tieback Diode		J122-6, 9	

Flipper Circuits

Connectors From Power Driver Board:

Wire Color	Function	To Playfield
Gray/Yellow	Left Flipper Power	J109-5
Blue/Yellow	Right Flipper Power	J109-7

Connectors From Flipper Controller Board:

Wire Color	Function	To Power Driver	To CPU	To Cabinet	To Playfield
Black	Ground	J801-1,4			
Gray	+5V	J804-1			
Gray/Green	+12V	J804-2			
Black	Ground	J804-5,6			
Ribbon Cable	Data		J803		
Orange/Gray	Upper Left Flipper Holding				J802-1
Black/Blue	Upper Left Flipper Power				J802-3
Orange/Violet	Upper Right Flipper Holding				J802-4
Black/Yellow	Upper Right Flipper Power				J802-6
Orange/Blue	Lower Left Flipper Holding				J802-7
Blue/Gray	Lower Left Flipper Power				J802-9
Orange/Green	Lower Right Flipper Holding				J802-11
Blue/Violet	Lower Right Flipper Power				J802-13
Blue/Violet	Right Flipper Button			J805-1	
Blue/Gray	Left Flipper Button			J805-2	
Black/Yellow	Right Flipper Button			J805-3	
Black/Blue	Left Flipper Button			J805-5	
Orange	Switch Ground			J805-6	
Black/Green	Right Flipper Switch				J806-1
Black/Blue	Left Flipper Switch				J806-3
Black/Violet	Upper Right Flipper Switch				J806-4
Black/Gray	Upper Left Flipper Switch				J806-5
Orange	Switch Ground				J806-6

General Illumination Circuits

Connectors From Power Driver Board:

Wire Color	Function	To Playfield	To Cabinet	To Insert	Triac
Brown	Illum. String 1	J120-1		J121-2	Q18
Orange	Illum. String 2			J121-3	Q10
Yellow	Illum. String 3				Q14
Green	Illum. String 4				Q16
Violet	Illum. String 5	J120-6	J-119-3		Q12
					Fuses
White/Brown	Return 1	J120-7			F110
White/Orange	Return 2			J121-8	F109
White/Yellow	Return 3			J121-9	F108
White/Green	Return 4				F107
White/Violet	Return 5	J120-11	J119-1		F106

Power Circuits

Connectors From Power Driver Board:

Wire Color	Function	To Cabinet	To Dot Matrix Controller	To Playfield	To CPU & Flipper Bd.
Gray	Digital +5VDC		J117-4		J114-3,4
Gray/Green	Switch +12VDC				J114-1,2
Gray/Yellow	Analog +12VDC	J116-2	J117-2	J118-2	
Black	Ground	J116-3	J117-3	J118-3	J114-5,7

Power Circuits

Connectors From Power Driver Board

Wire Color	Function	To Playfield	To Backbox
Violet/Yellow	High Power 50V	J107-3	
Violet/Orange	Low Power 50V	J107-2	
Violet/Green	Continuous Duty	J107-1	
Red	Flasher 20V	J107-5	
Red/White	Flasher 20V	J107-6	J106-5
White/Blue	50VAC	Not Used	
White/Blue	50VAC	Not Used	
Black	Ground	Not Used	

Logic Circuits

Wire Color	Function	
Ribbon Cable	Data	J201 To/From Dot Matrix Controller
Ribbon Cable	Data	J202 To/From Sound Board & Dot Matrix Controller
Ribbon Cable	Data	J204 Not Used

Connectors From Power Driver Board

Black	Ground	J210-1
Black	Ground	J210-3
Gray	+5VDC	J210-4
Gray	+5VDC	J210-5
Gray/Green	+12VDC	J210-6
Gray/Green	+12VDC	J210-7
Ribbon Cable	Data	J211

Display Circuits

Wire Color	Function	To:	From: CPU Bd.	From: Sound Bd.
Ribbon Cable	Data	J601	J202	J506
Ribbon Cable	Data	J602	201	
Ribbon Cable	Data	J603 To/From Dot Matrix Display/Driver Board		
		Connector to Dot Matrix Display/Driver		
Orange	-125V	J604-1		
Blue	-113V	J604-2		
Black	Ground	J604-4		
Black	Ground	J604-5		
Gray	+5V	J604-6		
Gray/Yellow	+12V	J604-7		
Brown	+62V	J604-8		
		Connector to Transformer (AC)		
White	80VAC	J605-1		
White	80VAC	J605-2		
Violet	100VAC	J605-3		
Violet	100VAC	J605-5		
		Connector From Power Driver Board		
Black	Ground	J606-1		
Black	Ground	J606-3		
Gray	+5V	J606-4		
Gray	+5V	J606-5		
Gray/Yellow	+12V	J606-6		
Gray/Yellow	+12V	J606-7		

Sound Circuits

Wire Color	Function	
Ribbon Cable	Data	J506 To/From CPU Board, Flipper Board & Dot Matrix Controller
		Connector From Transformer Secondary
Gray/Green	+12VDC	J501-1
Gray/Green	+12VDC	J501-2
Gray	+5VDC	J501-4
Gray	+5VDC	J501-5
Gray/White	-12VDC	J501-6
Gray/White	-12VDC	J501-7
		Power From CPU/Power Driver Board
Gray	+5VDC	J502-1
Gray	+5VDC	J502-3
Black	Ground	J502-4
Black	Ground	J502-5
		Cabinet Speaker Connection
Black/Yellow	Speaker	J504-2
		Backbox Speaker Connection
Black/Yellow	Speaker	J505-3

Notes...

The ADDAMS FAMILY Lamp Matrix

Yellow (B+) — Red

Row \ Column	1 Yellow-Brown J137-1 Q98	2 Yellow-Red J137-2 Q97	3 Yellow-Orange J137-3 Q96	4 Yellow-Black J137-4 Q95	5 Yellow-Green J137-5 Q94	6 Yellow-Blue J137-6 Q93	7 Yellow-Violet J137-7 Q92	8 Yellow-Gray J136-9 Q91
1 Red-Brown J133-1 Q90	Thing Multiball 11	Upper Left Jet 21	G-R-E-E-D "G" 31	Not Used 41	Thing 51	Left Special 61	Lite Advance X 71	"Thing" "*"-1 81
2 Red-Black J133-2 Q89	Extra Ball 12	Upper Right Jet 22	G-R-E-E-D "R" 32	Advance X 42	Raise The Dead 52	Lite Thing Flips 62	Right Special 72	"Thing" "T" 82
3 Red-Orange J133-4 Q88	Jackpot 13	Center Left Jet 23	G-R-E-E-D "E"-1 33	Grave "G" 43	Lite Extra Ball 53	Lite 2 Bear Kicks 63	Shoot Again 73	"Thing" "H" 83
4 Red-Yellow J133-5 Q87	Grave "A" 14	Center Right Jet 24	G-R-E-E-D "E"-2 34	Grave "R" 44	House 6 Million 54	Electric Chair Yellow 64	Vault Green 74	"Thing" "I" 84
5 Red-Green J133-6 Q86	Stars 15	Lower Jet 25	G-R-E-E-D "D" 35	The Mamushku 45	Quick Multiball 55	House "?" 65	Vault Red 75	"Thing" "N" 85
6 Red-Blue J133-7 Q85	Super Jackpot 16	Cousin It 26	5X Graveyard 36	Swamp Lock 46	Fester's Tunnel Hunt 56	House 9 Million 66	Not Used 76	"Thing" "G" 86
7 Red-Violet J133-8 Q84	Grave "V" 17	2 Bear Kicks 27	Center Swamp Million 37	Electric Chair Red 47	House Seance 57	Graveyard At Max 67	Thing Yellow 77	"Thing" "*"-2 87
8 Red-Gray J133-9 Q83	Upper Swamp Million 18	Thing Flips 28	Lower Swamp Million 38	Grave "E" 48	Hit Cousin It 58	House 3 Million 68	Thing Green 78	Credit Button 88

The ADDAMS FAMILY Switch Matrix

White — Green

Dedicated Grounded Switches
Orange-Brown (1) J205-1 Left Coin Chute D1
Orange-Red (2) J205-2 Center Coin Chute D2
Orange-Black (3) J205-3 Right Coin Chute D3
Orange-Yellow (4) J205-4 4th Coin Chute D4
Orange-Green (5) J205-6 Normal Function: Service Credits / Test Function: Escape D5
Orange-Blue (6) J205-7 Normal Function: Volume Down / Test Function: Down D6
Orange-Violet (7) J205-8 Normal Function: Volume Up / Test Function: Up D7
Orange-Gray (8) J205-9 Normal Function: Begin Test / Test Function: Enter D8

Row \ Column	1 Green-Brown J206-1 U20-16	2 Green-Red J206-2 U20-17	3 Green-Orange J206-3 U20-18	4 Green-Yellow J206-4 U20-15	5 Green-Black J206-5 U20-14	6 Green-Blue J206-6 U20-13	7 Green-Violet J206-7 U20-12	8 Green-Gray J206-9 U20-11
1 White-Brown J208-1 U19-11	Buy In 11	Slam Tilt 21	Upper Left Jet 31	Grave "G" 41	Shooter Lane 51	Left Ramp Enter 61	Swamp Lock Upper 71	Bookcase Open 81
2 White-Red J208-2 U19-9	Not Used 12	Coin Door Closed 22	Upper Right Jet 32	Grave "R" 42	Not Used 52	Train Wreck 62	Swamp Lock Center 72	Bookcase Closed 82
3 White-Orange J208-3 U19-5	Start Button 13	Ticket Opto. 23	Center Left Jet 33	Chair Kickout 43	Bookcase Opto 1 53	Thing Eject Lane 63	Swamp Lock Lower 73	Not Used 83
4 White-Yellow J208-4 U19-7	Plumb Bob Tilt 14	Always Closed 24	Center Left Jet 34	Cousin It 44	Bookcase Opto 2 54	Right Ramp Enter 64	Lockup Kickout 74	Thing Down Opto 84
5 White-Green J208-5 U19-11	Left Trough 15	Right Flipper Lane 25	Lower Jet 35	Lower Swamp Million 45	Bookcase Opto 3 55	Right Ramp Top 65	Left Outlane 75	Thing Up Opto 85
6 White-Blue J208-7 U19-9	Center Trough 16	Right Outlane 26	Left Slingshot 36	Not Used 46	Bookcase Opto 4 56	Left Ramp Top 66	Left Flipper Lane 2 76	Grave "A" 86
7 White-Violet J208-8 U19-5	Right Trough 17	Ball Shooter 27	Right Slingshot 37	Center Swamp Million 47	Bumper Lane Opto 57	Upper Right Loop 67	Thing Kickout 77	Thing Eject Hole 87
8 White-Gray J208-9 U19-7	Outhole 18	Not Used 28	Upper Left Loop 38	Upper Swamp Million 48	Right Ramp Exit 58	Vault 68	Left Flipper Lane 1 78	Not Used 88

Flipper Grounded Switches
Black-Green J208-1 Right Flipper End of Stroke F1
Blue-Violet J205-1 Right Flipper Button F2
Black-Blue J208-3 Left Flipper End of Stroke F3
Blue-Gray J205-2 Left Flipper Button F4
Black-Violet J208-4 Upper Right Flipper End of Stroke F5
Black-Yellow J205-3 Upper Right Flipper Button F6
Black-Gray J205-5 Upper Left Flipper End of Stroke F7
Black-Blue J205-5 Upper Left Flipper Button F8

WARNINGS & NOTICES

WARNING

FOR SAFETY AND RELIABILITY, substitute parts and equipment modifications are not recommended. Use of Non-BALLY parts or modifications of game circuitry, may adversely affect game play, or may cause injuries.

SUBSTITUTE PART OR EQUIPMENT MODIFICATIONS may void FCC Type Acceptance.

BECAUSE THIS GAME IS PROTECTED by Federal copyright, trademark, and patent laws, unauthorized game conversions may be illegal under Federal law.

THIS 'CONVERSION' PRINCIPLE ALSO APPLIES to unauthorized facsimiles of BALLY equipment, logos, designs, publications, assemblies and games (or game feature not deemed to be public domain), whether manufactured with BALLY components or not.

Notice

MIDWAY® is a registered trademark of Midway Manufacturing Company. The Addams Family™ and BALLY® are trademarks used by Midway with permission. WILLIAMS, Lane-change, and Multi-ball are trademarks of WILLIAMS Electronics Games, Inc. Entire contents of this manual ©1994 MIDWAY MANUFACTURING COMPANY, manufacturers of BALLY Amusement Games. All rights reserved.

WARNING

NOTE: This equipment has been tested and found to comply with the limits for a Class A digital device, pursuant to Part 15 of the FCC Rules. These limits are designed to provide reasonable protection against harmful interference when the equipment is operated in a commercial environment. This equipment generated, uses, and can radiate radio frequency energy and if not installed and used in accordance with the instruction manual, may cause harmful interference to radio communications. Operation of this equipment in a residential area is likely to cause harmful interference in which case the user will be required to correct the interference at his own expense.

RF Interference Notice

CABLE HARNESS PLACEMENTS and ground strap routing on this game have been designed to keep RF radiation and conduction within levels accepted by the FCC Rules.

TO MAINTAIN THESE LEVELS, reposition harnesses and reconnect ground straps to their original placements, if they become disconnected during maintenance.

FCC STICKER. Check the back of your game to verify that an FCC-certification sticker was attached to your game at the factory. All Games that leave the BALLY plant have been tested and found to comply with FCC Rules. Because the sticker is proof of this fact, legal repercussions to the owner and distributor may result, if the sticker is missing. If you receive a game, manufactured after December 1982, that has no FCC sticker, call BALLY for advice or write us a note on your Game Registration Card. Be sure that the card bears your game's serial number.

FOR SERVICE...
CALL your authorized
BALLY Distributor

MIDWAY Manufacturing Company
3401 N. California
Chicago, IL 60618

©Orion Music Publishing, Inc.
Adm. by Next Decade Entertainment

© 1991 Midway Manufacturing Company
Motion Picture Elements:
THE ADDAMS FAMILY™ & ©1991 Paramount Pictures
THE ADDAMS FAMILY™ designates a trademark of Paramount Pictures. Used by Midway Manufacturing Company under authorization. All Rights Reserved.

CAUTION: Transport this game ONLY with hinged backbox DOWN!