Gottlieb®

THE PREMIER NAME IN PINBALL

Deadly WEAPON™

Premier® Technology

INSTRUCTION MANUAL

Deadly WEAPON™

(GAME #724)

(3 BALL GAME)

INSTRUCTION MANUAL

TABLE OF CONTENTS

SECTION		PAGE(S)
I.	INSTALLATION	ii-1
II.	GAME PLAY AND SCORING	2-5
III.	TEST MODE	
	I. SELF-TEST	6-7
	II. BOOKKEEPING	7
	III. GAME ADJUSTMENTS	7-15
	IV. BURN-IN	15
IV.	THEORY OF OPERATION	16-19
V.	GENERAL INFORMATION	20-21
VI.	WIRING AND SCHEMATIC DIAGRAMS	23-54
VII.	PARTS INFORMATION	55-66

GAME PROM: (TYPE 27C512)	SOUND PROMS: (TYPE 27C256)
724/G PROM	724/DROM 1 724/YROM 1

NOTE: ANY PROM CHANGES DURING PRODUCTION WILL BE INDICATED BY A REVISION NUMBER FOLLOWING THE GAME NUMBER. CONSULT YOUR DISTRIBUTOR FOR ANY PROM CHANGE UPDATE.

Premier® Technology

759 INDUSTRIAL DRIVE
BENSENVILLE, IL 60106
1-708-350-0400
TELEX 215009 PRMR
FAX: 1-708-350-1097

©1990 PREMIER TECHNOLOGY
COPYRIGHT ALL RIGHTS RESERVED

THE PREMIER HOTLINE
1-800-444-0761

SYSTEM 3 OVERVIEW

System 3 contains many new features which improve game play and reliability. Some of these features are as follows:

1) New lithium battery provides data retention for a minimum of 5 years under normal operation and virtually eliminates battery leakage. Also a low battery warning is given in the displays when the voltage drops to the critical level.
2) New interlocking connector system for improved reliability.
3) Use of High Speed CMOS technology for low power consumption and cooler operation.
4) Improved solenoid driver reliability due to simplified circuitry and the use of Rugged Power MOSFETS.
5) Lamp short protection.
6) Switch matrix input protection.
7) Easy line voltage adjustment on location.
8) Improved bookkeeping functions.
9) Improved display control.
10) Capability for operators to enter their own messages in the attract mode.

"**WARNING:** This equipment generates, uses, and can radiate radio frequency energy and if not installed and used in accordance with the instructions manual, may cause interference to radio communications. It has been tested and found to comply with the limits for a Class A computing device pursuant to Subpart J of Part 15 of FCC Rules, which are designed to provide reasonable protection against such interference when operated in a commercial environment. Operation of this equipment in a residential area is likely to cause interference in which case the user at his own expense will be required to take whatever measures may be required to correct the interference."

I. INSTALLATION

A. SET-UP

1. Bolt the legs to the cabinet.

2. Lift lightbox into an upright position. Be sure none of the cables are crimped in between the lightbox and cabinet.

3. Engage the snap in the rear of the lightbox to the cabinet.

4. To remove the lightbox backglass and gain servicing access to the electroncis panel and the insert lamp assembly, proceed as follows:

   Unlock the lightbox by turning the key a quarter turn counter-clockwise, the hinged speaker panel grill will swing out toward you.

   The backglass is held in place in the retaining groove at the bottom ledge of the lightbox and the wood retaining tabs on each side. Lift the backglass up about an inch, pull the bottom of the backglass toward you and slide it down past the two wood retaining tabs, carefully set aside.

   Unloosen the two wing nuts on the left side and push the lock slide upwards, this allows the lightbox lamp insert to swing out and gaining access to service the back side and access to the electronics panel.

5. Secure the lightbox to the cabinet with the bolts and washers provided.

   Reverse the aforementioned procedure as the first step to re-assemble the lightbox.

   To replace the backglass, slide the backglass up behind the wood retaining tabs and set down into the bottom retaining groove.

   To secure the backglass, pivot the speaker panel grill towards the backglass and turn the key clockwise a quarter turn, the lightbox is now locked.

6. Open the cabinet door and loosen the front moulding locking arm.

7. Remove the moulding from the playfield.

8. Slide the cabinet glass toward you and remove it.

9. Raise the playboard, slide it forward and rest it on its support.

10. Unravel and straighten out the power line cord located at the rear of the pinball cabinet.

11. Proceed to "B. CHECK-OUT".

B. CHECK-OUT

1. Check that all cables are clear of moving parts.

2. Check for any loose wires.

3. Check switches for loose solder or other foreign matter.

4. Be certain all fuses are firmly seated.

5. Check transformer for any foreign matter across terminals.

6. Be sure that the Transformer Panel power input connector A12J5, corresponds to the supply voltage.

7. Check the setting of the normally open tilt switch on the underside of the playfield. One blade should be free-floating with a weight on the end.

8. Lower the playfield into the cabinet. Using the leg adjusters, level the playfield and set the pitch. Recommended pitch is 6°.

9. The plumb-bob tilt can be adjusted by loosening the clip and raising the plumb-bob to increase its sensitivity, or lowering it to decrease its sensitivity.

10. Reinstall the cabinet glass, front moulding and the lightbox assembly.

11. Plug the line-cord into a properly grounded 3-wire receptacle ONLY!

12. Refer to Section III to make all necessary game adjustments.

13. CAUTION! If this game has been subjected to extreme cold, allow to warm up to room temperature.

I. INSTALLATION

C. COIN METER (OPTIONAL)

A +12vdc mechanical coin meter may be installed by the operator to count total coins accepted by the machine. The coin meter leads should be soldered to the lugs on the terminal strip mounted inside the front door on the right side (see Figure 1). If the coin meter is polarized, the positive lead (red) should be attached to the lug that has the cathode (banded) side of the diode attached to it otherwise the leads may be attached in any order.The COIN METER adjustment must be set to on and make sure that the GAME MODE adjustment is not set to either REPLAY + TICKETS or TICKETS ONLY (see Game Adjustments section).

D. TICKET DISPENSER (OPTIONAL)

This machine is equipped to easily interface to the Deltronic Labs #DL-4-S-S ticket dispenser with the outside mounting option. To install the dispenser, first locate the five partially drilled holes on the inside of the cabinet on the right side (see Figure 1). The four "A" holes are for mounting the cabinet with #10 X 1-1/4" carriage bolts. The "B" hole is for cable access to the unit. Drill the "A" holes out from the inside of the cabinet using a 13/64" drill bit. Drill the "B" hole out from the inside of the cabinet using a 1" drill bit. The GAME MODE adjustment is used to set whether to dispense a number of tickets along with each replay awarded (REPLAY + TICKETS) or to dispense a number of tickets in place of each replay awarded (TICKETS ONLY). The TICKETS TO AWARD adjustment is used to set the number of tickets to dispense for each replay awarded (see Game Adjustments section).
NOTE: Make sure that the COIN METER adjustment is set to off when using a ticket dispenser.

E. BILL ACCEPTOR (OPTIONAL)

A bill acceptor can be easily interfaced electrically to this machine. The two unused 522 (green-red-red) and 622 (blue-red-red) center chute switch wires should be attached to the switch output of the bill acceptor (see Cabinet/Lightbox Schematic Diagram). The line voltage outlet located inside the cabinet on the right side can be used for supplying power to the unit. The CENTER CHUTE SETTING adjustment can then be used to set the number of credits to be issued for each bill accepted.

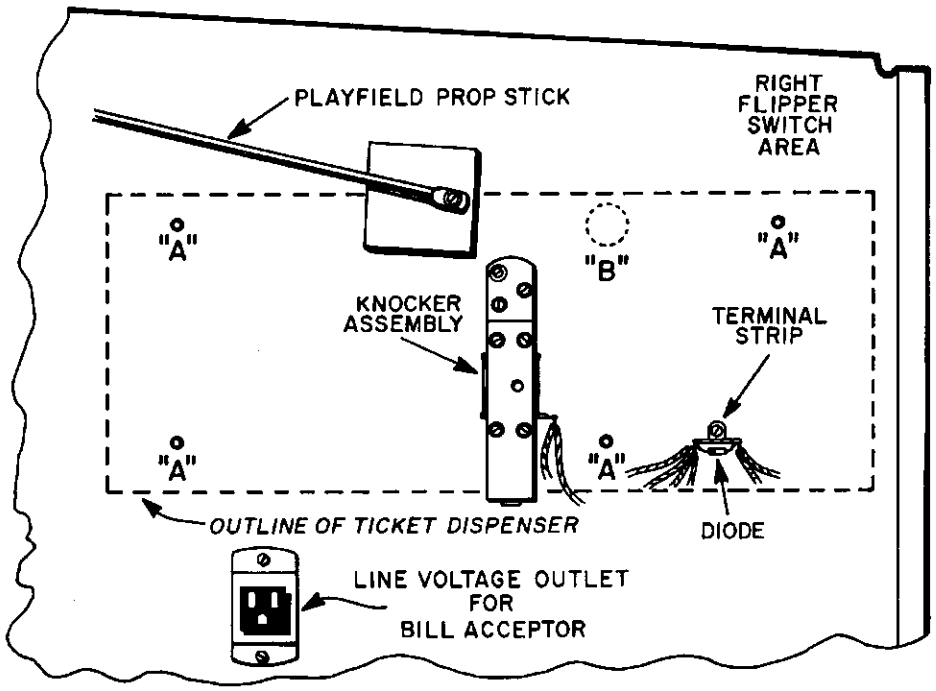

FIGURE 1.

II. GAME PLAY AND SCORING

HOW TO PLAY

#1 - #5 SPOT TARGETS:

- SCORE 5,000 (3-BALL) OR 3,000 (5-BALL).
- COMPLETING ALL 5 TARGETS RESTARTS SEQUENCE AND AWARDS AN EXTRA BALL IF LIT, ADVANCES BONUS MULTIPLIER IF LIT, OR ADDS 1 ARREST IF LIT.

#1 - #3 DROP TARGETS:

- SCORE 5,000.
- COMPLETING ALL 3 TARGETS IN NORMAL MODE RESTARTS THE SEQUENCE AND INCREASES BONUS IF LIT OR ADDS 1 ARREST IF LIT.
- COMPLETING ALL 3 TARGETS WHILE IN THE "MILLION TIMES X" BONUS ROUND SCORES 1,000,000 TIMES THE MULTIPLIER AND RESTARTS THE SEQUENCE.

TOP POP BUMPERS AND KICKING TARGET:

- IN NORMAL MODE, SCORE 1,000 AND ADVANCE "POP BONUS" 10,000 (3-BALL) OR 5,000 (5-BALL).
- IN A BONUS ROUND, SCORE 3,000 (3-BALL) OR 1,000 (5-BALL).
- TOGGLES THE MYSTERY LAMPS, OUTLANE ADD BADGE LAMPS, AND EB LAMP IF ADJUSTED.
- IN THE "SPECIAL" BONUS ROUND, MOVES THE FLASHING CRIME SCENE.
- STARTS "LIGHT COLLECT POP BONUS" FLASHING.

BOTTOM POP BUMPER & KICKING RUBBER:

- SCORE 30.
- IN THE "SPECIAL" BONUS ROUND, MOVES THE FLASHING CRIME SCENE.
- TOGGLES THE MYSTERY LAMPS, OUTLANE ADD BADGE LAMPS, AND EB LAMP IF ADJUSTED.

LEFT SPINNER:

- SCORE 100 OR 10,000 IF INCREASE JACKPOT LIT.
- IF INCREASE JACKPOT LIT, ADD 10, 20, OR 30 THOUSAND TO JACKPOT PER ADJUSTMENT.
- LIGHT "WEST SIDE" LAMP. IF BOTH "WEST SIDE" & "EAST SIDE" ARE LIT, START "EAST SIDE" FLASHING.
- IF YELLOW SQUAD CAR 7 FLASHING, ADD 1 ARREST, COLLECT ANY REMAINING SQUAD CAR POINTS, AND LIGHT ADD YELLOW BADGE.

RIGHT SPINNER:

- SCORE 1,000 OR 10,000 IF INCREASE JACKPOT LIT.
- IF INCREASE JACKPOT LIT, ADD 10, 20, OR 30 THOUSAND TO JACKPOT PER ADJUSTMENT.
- IF SQUAD CAR 6 IS FLASHING IN NORMAL MODE, ADD 1 ARREST AND COLLECT ANY REMAINING SQUAD CAR POINTS.
- IF THE "BANK" CRIME SCENE IS FLASHING IN NORMAL MODE, COLLECT ARRESTS PER ADJUSTMENT.

II. GAME PLAY AND SCORING

LEFT HOLE:

- SCORE 5,000.
- COLLECT SKILL SHOT AWARD IF SKILL SHOT ACTIVE.
- ENTER "MYSTERY" MODE IF MYSTERY FLASHING.
- ADD A YELLOW BADGE IF LIT.
- ENTER THE "PIK-5" MODE IF PIK-5 FLASHING.
- ENTER THE "RIOT" BONUS ROUND IF SUPERCOP FLASHING.

RIGHT HOLE:

- SCORE 5,000.
- ENTER "MYSTERY" MODE IF MYSTERY FLASHING.
- ADD A RED BADGE IF LIT.
- COLLECT "POP BONUS" IF FLASHING.

LEFT OUTLANE DRAIN:

- KICKSAVE UNLIT SCORES 50,000 (3-BALL) OR 20,000 (5-BALL).
- KICKSAVE LIT SCORES 5,000 AND RETURNS BALL INTO PLAY.

RIGHT OUTLANE DRAIN:

- SCORES 50,000 (3-BALL) OR 20,000 (5-BALL).
- ADD A BADGE IF LIT.

STAR ROLLOVER:

- SCORE 10.
- IN NORMAL MODE, LIGHT INCREASE JACKPOT LAMPS.
- SPOT FLASHING SQUAD CAR IF LIT.

TOP LEFT ROLLOVER:

- SCORE 5,000.
- IF SQUAD CAR 3 FLASHING IN NORMAL MODE, ADD 1 ARREST AND COLLECT ANY REMAINING SQUAD CAR POINTS.
- IF "WEST SIDE PUMP" CRIME SCENE FLASHING IN NORMAL MODE, COLLECT ARRESTS PER ADJUSTMENT.

#1 CENTER ROLLOVER:

- SCORE 20,000.
- IF "LIGHT COLLECT POP BONUS" FLASHING, LIGHTS "SUPERCOP" AND "COLLECT POP BONUS" LAMPS.

#2 CENTER ROLLOVER:

- SCORE 5,000.
- IF SQUAD CAR 5 FLASHING IN NORMAL MODE, ADD 1 ARREST AND COLLECT ANY REMAINING SQUAD CAR POINTS.
- IF "ALLEY" CRIME SCENE FLASHING IN NORMAL MODE, COLLECT ARRESTS PER ADJUSTMENT.

#3 CENTER ROLLOVER:

- SCORE 5,000.
- LIGHT KICKSAVE IF LIT PER ADJUSTMENT.
- IF RED SQUAD CAR 7 FLASHING IN NORMAL MODE, ADD 1 ARREST, COLLECT ANY REMAINING SQUAD CAR POINTS, AND LIGHT "ADD RED BADGE".
- IF "BURGER GRILL" CRIME SCENE FLASHING IN NORMAL MODE, COLLECT ARRESTS PER ADJUSTMENT.

TOP RIGHT ROLLOVER:

- SCORE 5,000.
- IF SQUAD CAR 1 FLASHING IN NORMAL MODE, ADD 1 ARREST AND COLLECT ANY REMAINING SQUAD CAR POINTS.
- IF "MALL" CRIME SCENE FLASHING IN NORMAL MODE, COLLECT ARRESTS PER ADJUSTMENT.

II. GAME PLAY AND SCORING

RIGHT SIDE MIDDLE ROLLOVER:

- SCORE 5,000.
- IF "EAST SIDE" IS FLASHING, COLLECT JACKPOT AND RESTART AT 1,000,000.
- IF "EAST SIDE" IS UNLIT, LIGHT IT. IF BOTH "EAST SIDE" & "WEST SIDE" ARE NOW LIT, START "EAST SIDE" FLASHING PER ADJUSTMENT.
- IF SQUAD CAR 4 FLASHING IN NORMAL MODE, ADD 1 ARREST AND COLLECT ANY REMAINING SQUAD CAR POINTS.
- IF "EAST SIDE HIGH" CRIME SCENE FLASHING IN NORMAL MODE, COLLECT ARRESTS PER ADJUSTMENT.

BOTTOM RIGHT RETURN ROLLOVER:

- SCORE 5,000.
- LIGHT INCREASE JACKPOT LAMPS IF NORMAL MODE.
- IF SQUAD CAR 2 FLASHING IN NORMAL MODE, ADD 1 ARREST AND COLLECT ANY REMAINING SQUAD CAR POINTS.

OUTHOLE:

- COLLECT BONUS TIMES MULTIPLIER.
- SCORE 10,000 FOR EACH ARREST.

ADDITIONAL FEATURES

JACKPOT:

- RESETS TO 1,000,000 WHEN GAME IS TURNED ON. JACKPOT INCREASES FOR EACH TURN OF THE SPINNERS WHEN LIT PER ADJUSTMENT. JACKPOT IS COLLECTED BY SHOOTING THE FLASHING "EAST SIDE" OR "WEST SIDE".

MULTIBALL FEATURE:

- THIS FEATURE IS ENTERED FROM THE "MYSTERY" OR "PIK-5" FEATURES. THE PLAYER HAS THE OPTION OF PLAYING FOR 10 ARRESTS OR MILLIONS OF POINTS. THE AWARD IS COLLECTED BY COMPLETING ALL 6 FLASHING SQUAD CARS DURING MULTIBALL. GAME PERMITS 2 OR 3 BALL MULTIBALL PLAY.

MYSTERY FEATURE:

- IN THE MYSTERY FEATURE, AN AWARD IS RANDOMLY SELECTED AND THEN AWARDED TO THE PLAYER.

PIK-5 FEATURE:

- THE PLAYER SELECTS ONE OF 5 AWARDS RANDOMLY DISPLAYED. PIK-5 LIGHTS FROM THE PLUNGER SKILL SHOT OR AFTER COMPLETING FLASHING SQUAD CAR 5 WHILE IN NORMAL PLAY.

CATCH-UP FEATURE:

- IF A PLAYER IS AWARDED CATCH-UP FROM "PIK-5" OR "MYSTERY", HIS SCORE OR ARRESTS BECOMES IMMEDIATELY EQUAL TO THE NEXT HIGHER PLAYER. IF HE ALREADY HAS THE HIGHEST, THEN HE RECEIVES 10 ARRESTS OR 1,000,000 POINTS.

RIOT BONUS ROUND:

- THIS BONUS ROUND IS ACHIEVED BY SHOOTING "SUPERCOP" OR BY COMPLETING THE LAST LETTER OF "WEAPON". ALL 6 CRIME SCENES BEGIN FLASHING FOR AN ADJUSTABLE TIME PERIOD. EACH FLASHPOINT SHOT MADE EARNS 3 ARRESTS. ALL 6 COMPLETE EARNS AN EXTRA 10 ARRESTS AND A SPECIAL.

II. GAME PLAY AND SCORING

SPECIAL BONUS ROUND:

- THIS ROUND IS ENTERED AFTER COMPLETING ALL 5 RED BADGES. ONE CRIME SCENE WILL BEGIN FLASHING FOR AN ADJUSTABLE TIME PERIOD. MAKING THE FLASHPOINT AWARDS A SPECIAL. THE ROUND WILL END OR CONTINUE WITH A NEW FLASHPOINT DEPENDING ON ADJUSTMENT. CRIME SCENES MOVE AROUND THE PLAYFIELD FROM POP BUMPER AND KICKING RUBBER HITS.

MILLION TIMES X BONUS ROUND:

- THIS ROUND IS ENTERED AFTER COMPLETING ALL 5 YELLOW BADGES. IN A 3-BALL GAME THE MULTIPLIER IS ADVANCED 1 STEP. THE DROP TARGETS BEGIN FLASHING FOR AN ADJUSTABLE TIME PERIOD. COMPLETING DROP TARGETS SCORES 1,000,000 TIMES THE BONUS MULTIPLIER.

EXTRA BALL FOR ARRESTS:

- AN EXTRA BALL CAN BE EARNED FOR MAKING 20, 40, OR 60 ARRESTS PER ADJUSTMENT.

FLASHING CRIME SCENES - FLASHPOINTS:

- DURING NORMAL MODE PLAY, RANDOM CRIME SCENES BEGIN FLASHING. MAKING THE FLASHPOINT AWARDS ARRESTS PER ADJUSTMENT.

POP BONUS:

- EACH PLAYER HAS HIS OWN POP BONUS COUNTER STARTING AT 1,000,000. THE BONUS IS ADVANCED FROM EVERY UPPER POP BUMPER HIT AND COLLECTED IN THE RIGHT HOLE IF FLASHING.

III. TEST MODE

There are several functions accessible to the operator while in the test mode. These functions are Self-Test, Bookkeeping, Game Adjustments, and Burn-In. Each of these functions will be explained in detail later in this section. To enter the test mode, the game must be in the attract mode (game over). Then depress the Test button located just inside the front door of the game. The operator will be given a choice as to which function he wants to access. Depressing the appropriate button will select that function. To exit the test mode or change functions the slam switch (front door) must be activated or the power must be turned off.

I. SELF-TEST

This function will allow the operator to test all the hardware related devices in the game. Each test is described below.

A. MEMORY TEST

This function tests all memory devices on the Control Board (A1). If all the devices pass the test an "OK" will be displayed. If a failure occurs, a description of the faulty component will be displayed. Then after a short period of time the Game Prom check sum will be displayed. The Credit button can be used to restart this test.

B. LAMP CHECK

This function will flash all the controlled lamps continuously. This will allow the operator to easily check for and replace any burned out light bulbs.

C. LAMP MATRIX TEST

This test will allow the operator to single step through and check the operation of each lamp in the game. The left black cabinet button will decrement the active lamp number by one while the right black cabinet button will increment the active lamp number by one. The strobe number and the return number are combined to form the lamp number (strobe,return) which is shown in the display. The Credit button can be used to restart this test. Only one lamp at a time should flash during this test.

D. RELAY AND SOLENOID TEST

This test will allow the operator to single step through and check the operation of each relay and solenoid driver in the game. The left black cabinet button will decrement the driver number shown in the display while the right black cabinet button will increment the driver number. The Credit button is then used to activate the driver for a short time period. Solenoid #31 ("Q" relay) is always on during this test so as to provide power to devices such as the pop bumpers and kicking rubbers.

E. SWITCH MATRIX TEST

This test will allow the operator to test the operation of all the switches used in the game. If no switches are closed when this test is started, the message "ALL SWITCHES OPEN" will be displayed. If any switches are closed either before or after this test is started, the closed switch number(s) will be displayed. The strobe number and the return number are combined to form the switch number (strobe,return). The Credit button can be used to restart this test.

F. DISPLAY TEST

This test will allow the operator to check the operation of the individual digits and segments of the displays. Depressing the right black cabinet button will advance to the next step of the test. The displays will first step through all the individual segments followed by all the individual digits. The Credit button can be used to restart this test.

G. LED DISPLAY TEST

This test will allow the operator to check the operation of the individual digits of the LED

Display Board. Depressing the right black cabinet button will advance to the next step of the test. The digits 0-9 will appear in numerical order starting from the leftmost (DIG1) to rightmost (DIG8). Only one digit should light during each step of this test.

H. SOUND TEST

This test allows the operator to test the interface lines from the Control Board (A1) to the Sound Board (A6). Every time the right black cabinet button is depressed, a tone should be heard from the Sound Board. During each tone, the sound line connection which is being tested will be displayed. After the tone stops the sound line which is being tested will still be kept at a low level (<.8v) until the right black cabinet button is depressed again or the Credit button is used to restart the test.

I. FRONT DOOR TEST

This test allows the operator to check the operation of the coin chutes used in the game. Utilizing this function will not affect any bookkeeping values. Each coin chute closure is categorized and shown in the display. The Credit button can be used to restart this test.

II. BOOKKEEPING

The Test button is used to step through bookkeeping. The upper display will contain a description of each step while the lower display will contain the step number and two different bookkeeping values. The value in the leftmost column represents long term bookkeeping. The value in the rightmost column (in brackets) represents short term bookkeeping. These two values are provided so that the operator may compare recent performance with long term performance and then make any necessary game adjustments.

NOTE: The first three left steps (coin chute counts) will not be displayed unless the credit button is pressed during that active step number.

The left black cabinet button will allow the operator to reset all of the left (long term) and right (short term) bookkeeping values. The right black cabinet button will allow the operator to reset all of the short term (right) bookkeeping only. If the R.BOOK AUTO-RESET adjustment is ON, the short term bookkeeping will automatically be reset after every 2000 plays (see Game Adjustments). Therefore, the operator does not need to reset the short term bookkeeping himself unless he prefers to follow his own procedure. Also, this feature will aid in adjusting the game payout percentage to the caliber of players in different locations. If there happens to be a major error in a long term bookkeeping value the letters ERR will appear to the right of that bookkeeping value. To correct this error the long term bookkeeping must be reset. A description of each bookkeeping step is given in the test mode flowchart.

III. GAME ADJUSTMENTS

This function allows the operator to make any adjustments to his game as necessary from time to time.

A. FACTORY SETTINGS

Upon entering the game adjustment section of bookkeeping, the operator is given a choice to load all factory settings or to single step through bookkeeping and adjust each value separately. If he chooses to enter the factory settings by depressing the Credit button, he will also be given a choice of what language to load. By using the right black cabinet button he may choose the appropriate language and then depress the Credit button to enter the settings. After the settings are loaded the display should show the message "FACTORY SETTINGS LOADED" for a short time and then proceed to game adjustment step 1. At any time during the previous steps the operator may either exit the test mode or depress the Test

button to proceed immediately to game adjustment step 1.

WARNING
Loading the factory settings will affect all previous game adjustment settings. Therefore be careful when selecting this feature.

B. GAME ADJUSTMENT STEPS

Each time the Test button is pressed a description of the next step appears in the upper display while the lower display contains the step number and the current status of that step.

1) SCORE REPLAY LEVEL 1
2) SCORE REPLAY LEVEL 2
3) SCORE REPLAY LEVEL 3
Each Score Replay Level may be set by using the left black cabinet button to decrement the score and the right black cabinet button to increment the score. The Credit button can be used to load the factory setting for each individual level if desired. If the Auto-Percentaging adjustment is on, Replay Levels 2 & 3 can only be set to on or off. If Replay Level 2 is on, the score level will be set to two times Replay Level 1. If Replay Level 3 is on, the score level will be set to three times Replay Level 1. This allows the operator several combinations of levels in the Auto-Percentaging mode (i.e. 1, 1 & 2, 1 & 3, or 1 & 2 & 3).

4) HIGH GAME TO DATE 1
5) HIGH GAME TO DATE 2
6) HIGH GAME TO DATE 3
7) HIGH GAME TO DATE 4
8) HIGH GAME TO DATE 5
Each High Game To Date may be set by using the left black cabinet button to decrement the score and the right black cabinet button to increment the score. The Credit button can be used to load the factory setting for the displayed level and all those below it.

9) LEFT CHUTE SETTING
10) RIGHT CHUTE SETTING
11) CENTER CHUTE SETTING
These three steps will set the coinage required to receive credits on the machine. The left black cabinet button is used to decrement the credits to be issued for the active coin while the right black cabinet button is used to increment the credits to be issued. The Credit button is used to change the active coin. The operator may enter up to a four coin sequence.
NOTE: If a coin sequence of less than four coins is used, enter 0 credits in each of the remaining coin positions.

Example 1
The following would be the setting for a 25 cent chute set to 50 cents for 1 play, 75 cents for 2 plays, and $1.00 for 3 plays.

COIN 1 = 0 CREDITS
COIN 2 = 1 CREDITS
COIN 3 = 1 CREDITS
COIN 4 = 1 CREDITS

Example 2
The following would be the setting for a 25 cent chute set to 50 cents per play.

COIN 1 = 0 CREDITS
COIN 2 = 1 CREDITS
COIN 3 = 0 CREDITS
COIN 4 = 0 CREDITS

12) GAME PERCENT PAYOUT
This step is used to set the game payout percentage used when the Auto-Percentaging adjustment is on. When the GAME MODE is set to Replay, Replay + Tickets, or Tickets, this setting refers to replay percentage. When the GAME MODE is set to Add a Ball this setting refers to extra ball percentage.

13) MATCH PERCENT PAYOUT
This step is used to set the match payout percentage. If this step is set to zero, the match will be disabled.

14) HIGH GAME REPLAYS
This step is used to set the

number of replays to award when the highest game to date has been beaten.

15) MAXIMUM CREDITS
This step sets the maximum number of credits allowed on the game.

16) TILT WARNINGS
This step sets the number of tilts allowed before the ball in play is terminated.

17) BALLS PER GAME
This step sets the game to 3-ball play or 5-ball play.

18) GAME MODE
This step allows the game to be played in Replay, Replay + Tickets, Tickets Only, Add a Ball, or Novelty mode. In Replay mode all Specials and replays are allowed. Replay + Tickets mode is the same as Replay mode with the addition of one or more tickets to be issued (TICKETS TO AWARD) along with each replay. In Tickets Only mode one or more tickets will be issued in place of each replay won. In Add a Ball mode all Specials and Score Level Replays award an extra ball in place of a replay. In Novelty mode all Specials award 1,000,000 points and the Score Replay Levels are disabled. Also, in both the Add a Ball and Novelty modes the Match is disabled.
NOTE: If either the Replay + Tickets or Tickets Only setting is selected do not set the COIN METER setting to on.

19) TICKETS TO AWARD
This step allows the operator to set the number of tickets to award when a replay has been won. This setting will only apply when the GAME MODE is set to either Replay + Tickets, or Tickets Only.
(see Installation section)

20) LANGUAGE
This step allows the Test Mode Steps to be displayed in English, German, or French.

21) LEFT AND RIGHT CHUTES
This step allows the left and right coin chutes to be set as separate or the same. If the chutes are set to be the same, all the coins passing through either chute are totaled and the sum is used toward a credit based on the Left Chute Setting (step 9). Also, the sum will be displayed in the Left Chute Coins bookkeeping step and the Right Chute Coins step will not be used.

22) LEFT AND RIGHT CHUTE BONUS
If this step is set to on, the player is allowed to add one coin for one credit if there are any credits remaining on the game, or during any game. If there are no credits left on the game at the time that the game ends the player is also allowed this option for a time period.

23) COIN METER
If this step is set to on, an electromechanical coin meter will be incremented for each accepted coin. (see Installation section)
NOTE: If this setting is on, do not use the Replay + Tickets or Tickets Only GAME MODE settings.

24) AUTO-PERCENTAGING
If this step is set to on, the Score Replay Levels will be adjusted periodically by 100,000 points so that the Game Percent Payout setting will match the actual Replay Percentage displayed in bookkeeping.
NOTE: If the GAME MODE is set to Add a Ball, the Extra Ball Percentage in bookkeeping is used in place of the Replay Percentage.

25) REPLAY LIMIT
This step may be set to no limit or one per player per game.

26) HIGH GAMES 2-5
This step will determine if High Games to Date (2-5) will be saved or erased when power is turned off.

27) ATTRACT SOUND
This step determines whether or not sounds are enabled during the attract mode (game over).

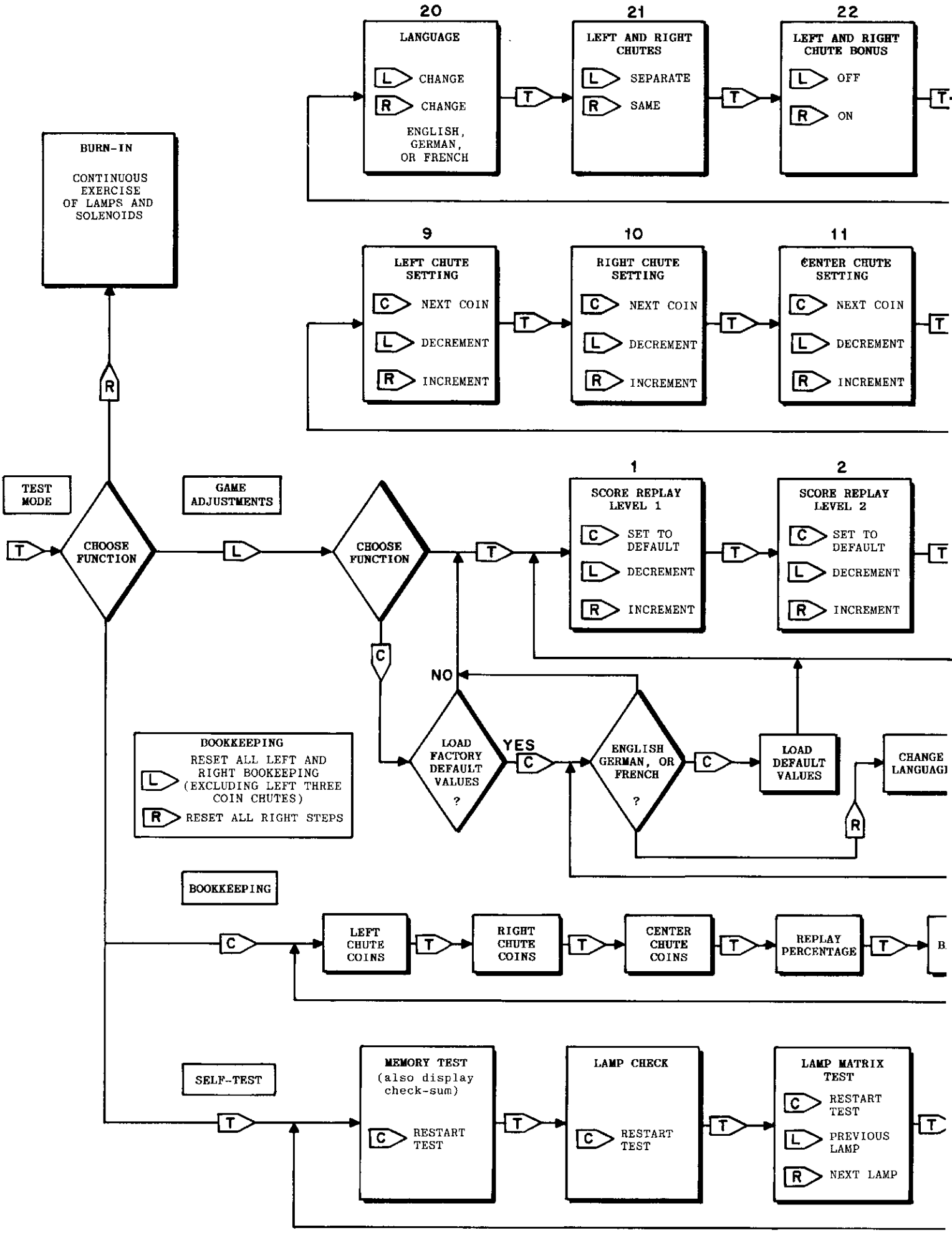
20
LANGUAGE
L CHANGE
R CHANGE
ENGLISH, GERMAN, OR FRENCH
21
LEFT AND RIGHT CHUTES
L SEPARATE
R SAME
22
LEFT AND RIGHT CHUTE BONUS
L OFF
R ON
BURN-IN
CONTINUOUS EXERCISE OF LAMPS AND SOLENOIDS
9
LEFT CHUTE SETTING
C NEXT COIN
L DECREMENT
R INCREMENT
10
RIGHT CHUTE SETTING
C NEXT COIN
L DECREMENT
R INCREMENT
11
CENTER CHUTE SETTING
C NEXT COIN
L DECREMENT
R INCREMENT
R
TEST MODE
T
CHOOSE FUNCTION
GAME ADJUSTMENTS
L
CHOOSE FUNCTION
T
1
SCORE REPLAY LEVEL 1
C SET TO DEFAULT
L DECREMENT
R INCREMENT
2
SCORE REPLAY LEVEL 2
C SET TO DEFAULT
L DECREMENT
R INCREMENT
C
NO
LOAD FACTORY DEFAULT VALUES ?
YES
C
ENGLISH GERMAN, OR FRENCH ?
C
LOAD DEFAULT VALUES
CHANGE LANGUAGE
R
BOOKKEEPING
RESET ALL LEFT AND RIGHT BOOKEEPING (EXCLUDING LEFT THREE COIN CHUTES)
L
R RESET ALL RIGHT STEPS
BOOKKEEPING
C
LEFT CHUTE COINS
T
RIGHT CHUTE COINS
T
CENTER CHUTE COINS
T
REPLAY PERCENTAGE
T
B
SELF-TEST
T
MEMORY TEST (also display check-sum)
C RESTART TEST
T
LAMP CHECK
C RESTART TEST
T
LAMP MATRIX TEST
C RESTART TEST
L PREVIOUS LAMP
R NEXT LAMP
T

III. TEST MODE

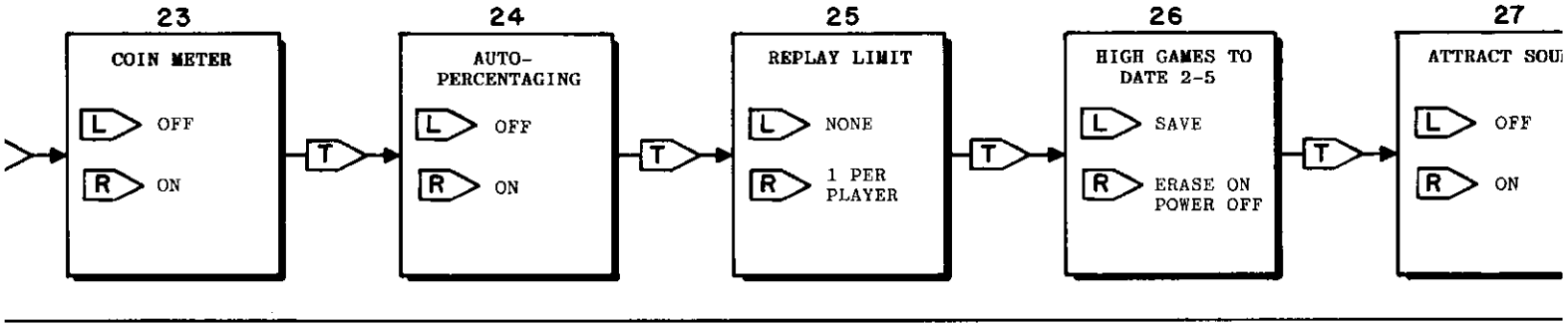

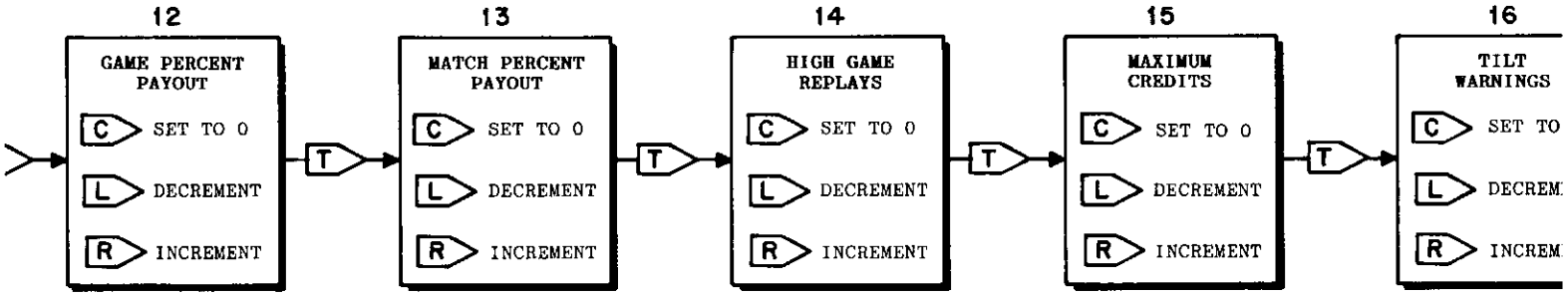

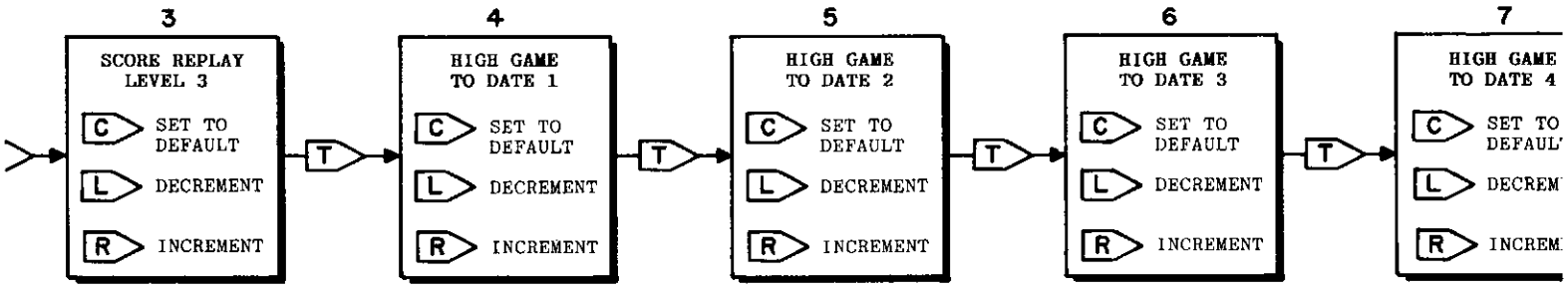

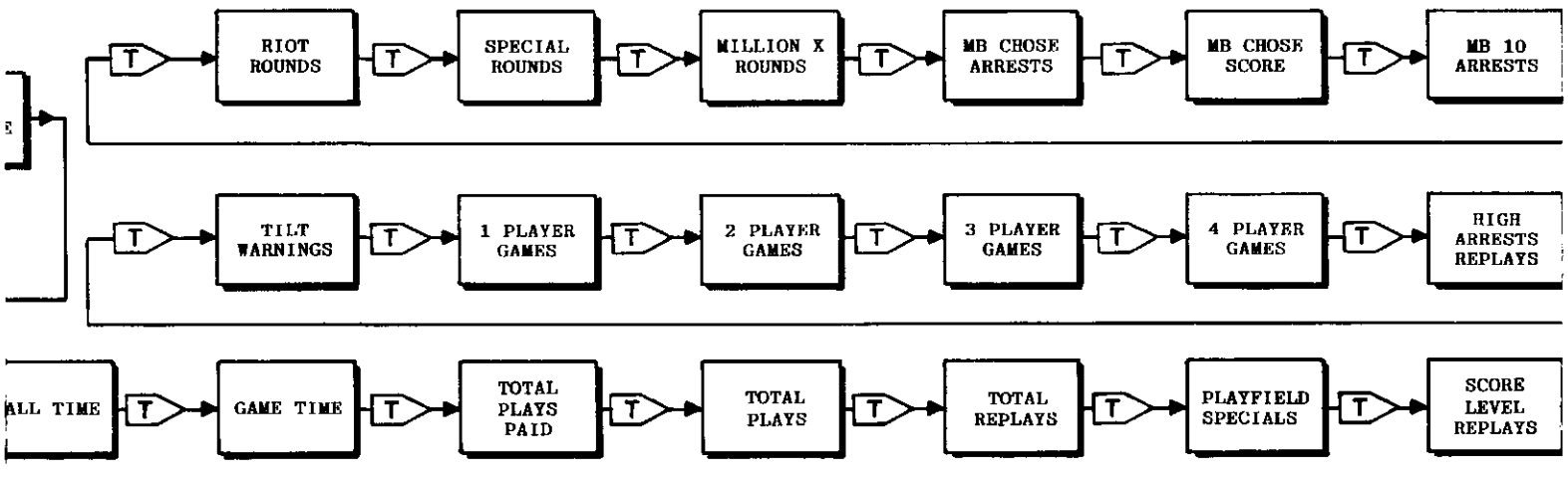

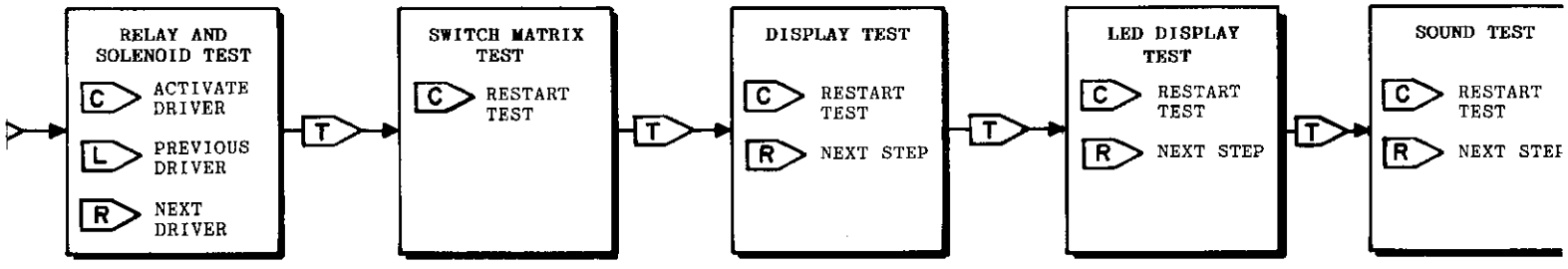

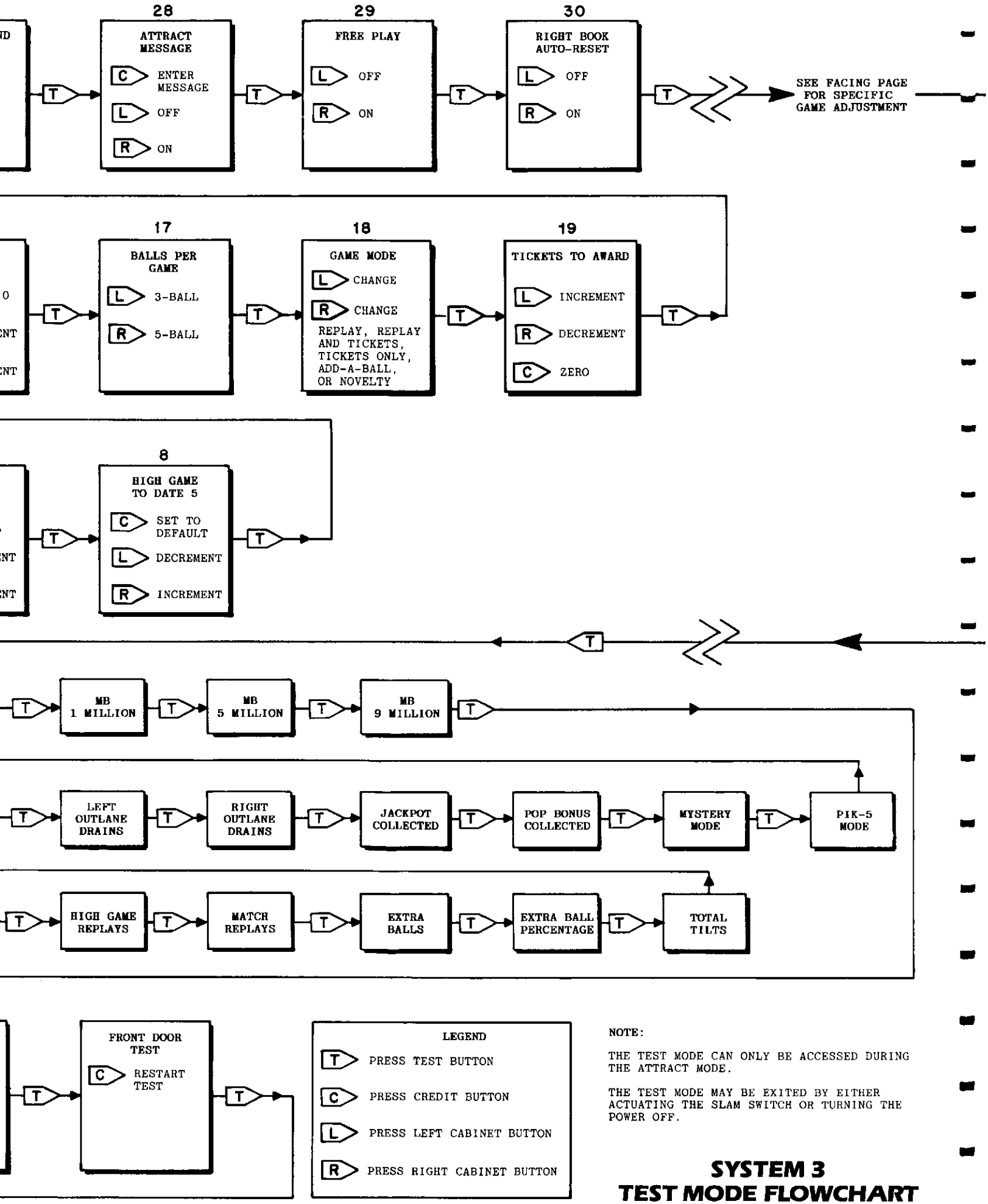

NOTE:

THE TEST MODE CAN ONLY BE ACCESSED DURING THE ATTRACT MODE.

THE TEST MODE MAY BE EXITED BY EITHER ACTUATING THE SLAM SWITCH OR TURNING THE POWER OFF.

SYSTEM 3 TEST MODE FLOWCHART

III. TEST MODE

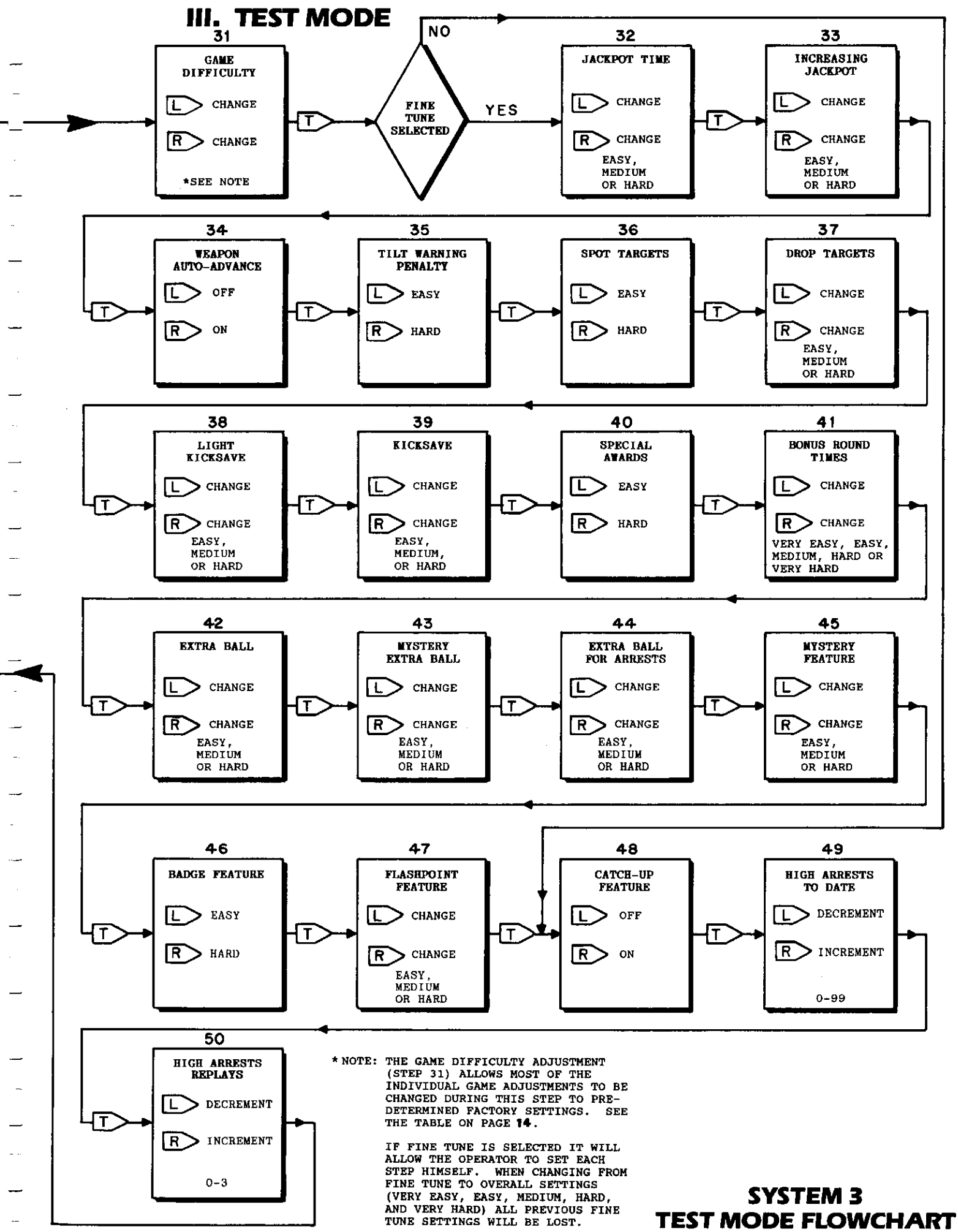

*NOTE: THE GAME DIFFICULTY ADJUSTMENT (STEP 31) ALLOWS MOST OF THE INDIVIDUAL GAME ADJUSTMENTS TO BE CHANGED DURING THIS STEP TO PRE-DETERMINED FACTORY SETTINGS. SEE THE TABLE ON PAGE 14.

IF FINE TUNE IS SELECTED IT WILL ALLOW THE OPERATOR TO SET EACH STEP HIMSELF. WHEN CHANGING FROM FINE TUNE TO OVERALL SETTINGS (VERY EASY, EASY, MEDIUM, HARD, AND VERY HARD) ALL PREVIOUS FINE TUNE SETTINGS WILL BE LOST.

SYSTEM 3
TEST MODE FLOWCHART

28) ATTRACT MESSAGE
This step is used to enable or disable an operator message during the attract mode (game over). This step is also used to enter a message into memory. To enter a message press the Credit button. The current message will be displayed and the cursor position will be indicated by the flashing character. If the current position is blank, a flashing directional arrow will appear. This type of arrow will indicate which direction the cursor will move if the Credit button is pressed. The Credit button is also used to select characters after they have been chosen using the left and right black cabinet buttons.

29) FREE PLAY
If this step is set to on, a game may be started without any credits left on the machine.

30) RIGHT BOOKKEEPING AUTO-RESET
If this step is set to on, all the short term bookkeeping steps (in brackets) will reset after 2000 plays. Otherwise they will not reset until 10,000 games have been played on the machine.

DEADLY WEAPON ADJUSTMENTS

OPERATOR ADJUSTMENT SETTINGS
(*** = FACTORY DEFAULT SETTING)

31) GAME DIFFICULTY -

AUTOMATICALLY SETS VARIOUS ADJUSTMENTS LISTED BELOW IN STEPS 32 - 47. THE FINE-TUNE SETTING ALLOWS THE OPERATOR TO INDIVIDUALLY SELECT EACH ADJUSTMENT.

STEP 31	GAME DIFFICULTY	VERY EASY	EASY	*** MEDIUM	HARD	VERY HARD
32	JACKPOT TIME	EASY	MEDIUM	MEDIUM	HARD	HARD
33	INCREASE JACKPOT	EASY	EASY	MEDIUM	MEDIUM	HARD
34	WEAPON AUTO-ADVANCE	ON	ON	ON	OFF	OFF
35	TILT WARNING	EASY	EASY	HARD	HARD	HARD
36	SPOT TARGETS	EASY	EASY	EASY	HARD	HARD
37	DROP TARGETS	EASY	EASY	MEDIUM	MEDIUM	HARD
38	LIGHT KICKSAVE	EASY	MEDIUM	MEDIUM	HARD	HARD
39	KICKSAVE	EASY	MEDIUM	MEDIUM	HARD	HARD
40	SPECIAL AWARDS	EASY	EASY	HARD	HARD	HARD
41	BONUS ROUND TIMES	VERY EASY	EASY	MEDIUM	HARD	VERY HARD
42	EXTRA BALL (SPOTS)	EASY	MEDIUM	MEDIUM	HARD	HARD
43	MYSTERY EXTRA BALL	EASY	EASY	MEDIUM	MEDIUM	HARD
44	EB FOR ARRESTS	EASY	EASY	EASY	MEDIUM	HARD
45	MYSTERY FEATURE	EASY	EASY	MEDIUM	MEDIUM	HARD
46	BADGE FEATURE	EASY	EASY	EASY	EASY	HARD
47	FLASHPOINT FEATURE	EASY	MEDIUM	MEDIUM	MEDIUM	HARD

32) JACKPOT TIME -

Chooses the length of time that "EAST SIDE" or "WEST SIDE" flashes to collect jackpot.

EASY = Long time
*** MEDIUM = Medium time
HARD = Short time

33) INCREASING JACKPOT -

Determines the point value added to the jackpot by lit spinners.

EASY = 30,000
*** MEDIUM = 20,000
HARD = 10,000

34) WEAPON AUTO-ADVANCE -

Selects if a "WEAPON" letter is advanced at game over.

OFF = No
*** ON = Yes

35) TILT WARNING PENALTY -

Determines if a player loses his bonus and multiplier for tilt warnings.

EASY = No
*** HARD = Yes

36) SPOT TARGETS -
*** EASY = May be completed in any order.
HARD = Must be completed in sequence.

37) DROP TARGETS -
EASY = Can be completed in any order.
*** MEDIUM = Any order. Will reset after timeout.
HARD = Must be completed in sequence.

38) LIGHT KICKSAVE -
EASY = Always lit. Kicksave also lit at beginning of ball.
*** MEDIUM = Always lit.
HARD = Toggles on and off with pop bumpers.

39) KICKSAVE -
EASY = Remains lit until kicksave is used.
*** MEDIUM = Goes out after a long time.
HARD = Goes out after a short time.

40) SPECIAL AWARDS -
Selects the flashing crime scenes while in the "SPECIAL" bonus round.
EASY = Lights new crime scene and continues.
*** HARD = Only one allowed and ends round.

41) BONUS ROUND TIMES -
Rate at which the "SPECIAL", "MILLION TIMES X", and "RIOT" bonus rounds count down.
VERY EASY = Slowest
EASY
*** MEDIUM
HARD
VERY HARD = Fastest

42) EXTRA BALL -
Selects when the spot target EB lights and if it toggles from pop bumpers.
EASY = Lights at 2X multiplier.
*** MEDIUM = Lights at 2X multiplier and toggles.
HARD = Lights at 3X multiplier and toggles.

43) MYSTERY EXTRA BALL -
Filters out EB from the mystery table if EB's are over the selected percentage.
EASY = 40%
*** MEDIUM = 30%
HARD = 20%

44) EXTRA BALL FOR ARRESTS -
*** EASY = 20 Arrests awards EB.
MEDIUM = 40 Arrests awards EB.
HARD = 60 Arrests awards EB.

45) MYSTERY FEATURE -
Selects the quantity of 3,000 point awards in the "MYSTERY" and "PIK-5" table.
EASY = 1
*** MEDIUM = 3
HARD = 7

46) BADGE FEATURE -
Selects how long "ADD BADGE" lamps stay lit.
*** EASY = Stays lit until all 5 badges are made.
HARD = Turned off at the start of each ball.

47) FLASHPOINT FEATURE -
Selects arrests scored for shot flashing crime scene during normal 1 ball play.
EASY = 5 Arrests
*** MEDIUM = 3 Arrests
HARD = 1 Arrests

48) CATCH-UP FEATURE -
Include "CATCH-UP ARRESTS" and "CATCH-UP SCORE" in "MYSTERY" and "PIK-5" table.
OFF = No
*** ON = Yes

49) HIGH ARRESTS TO DATE -
This step adjusts the "HIGH ARRESTS" (0-99).

50) HIGH ARRESTS REPLAYS -
Sets the number of replays to award when the highest arrests to date has been beaten (0-3).

SOUND ADJUSTMENTS

The speaker(s) output is controlled by the potentiometer mounted on a bracket located inside the cabinet next to the front door hinge.

Turning the potentiometer counter-clockwise will decrease the volume. Turning it clockwise will increase the volume.

POST ADJUSTMENTS

There are no post adjustment features in this game.

IV. BURN-IN

This function can be used to continuously exercise all the lamps and solenoids in the game.

IV. THEORY OF OPERATION

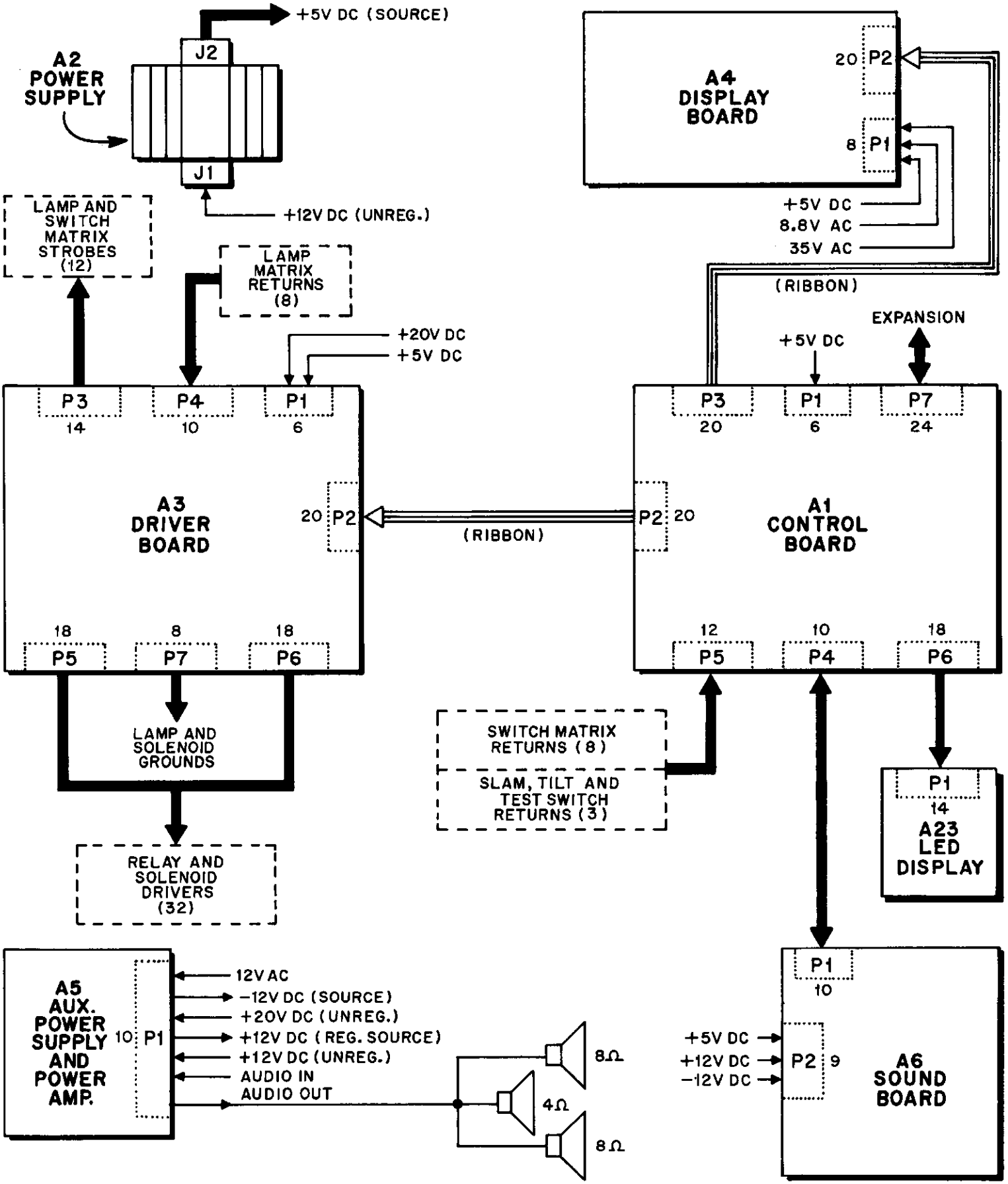

FIGURE 1, SYSTEM 3 BLOCK DIAGRAM

IV. THEORY OF OPERATION

A. CONTROL BOARD (A1)

The Control Board is supplied with 5vdc (A1P1) from the Power Supply (A2P2). The data contained in ram (U3) is kept valid when power is turned off by the lithium battery (BAT1) and controller (U6).

NOTE: When replacing either the battery, ram, or the controller there may be a message that appears in the display on power up the first time that indicates a low battery condition. If this occurs, turn the power off and back on again. The board should power up normally this time. If not, there is another problem on the board.

The Control Board can accommodate either a 27512 or a 27256 Eprom. JP1 must be installed for a 27512 or JP2 for a 27256 Game Prom. A 4 Mhz oscillator is configured using U17,R1,R2,C22,C23, and XTAL1. The oscillator output is then divided by 2 to a 2Mhz clock by U18 which is used as the input clock to the 65C02 (U1) microprocessor. The clock output of U1 (pin 39) is used as a sync signal for reading from or writing to the peripheral devices.

Two versatile interface adapters (U4,U5) are used to develop the necessary control signals for the system. The waveform generated on the CB2 output of U4 triggers the NMI input of the microprocessor. This signal controls the display refresh rate. The display connector (A1P3) is comprised of several signals. The display blanking (DBLNK), digit strobe (DSTB), and digit data (DDATA) are generated by U4-17,U4-16, and U4-15 respectively. The display segment data is output by U7 and latched into the appropriate device on the Display Board by the display segment strobes (DS0-DS3).

The Driver Board connector (A1P2) contains all the signals necessary to operate the lamp and switch matrix strobes, the lamp matrix returns, and the solenoids. The lamp clear (LCLR), lamp strobe (LSTB), and lamp strobe data (LDATA) are generated by U4-12,U4-11, and U4-10 respectively. The appropriate lamp return data during each active lamp strobe is output by U7 and latched into U5 on the Driver Board by the lamp return data strobe (LDS). The solenoid data is output by U7 and latched into the appropriate Driver Board device (U1-U4) by the solenoid strobes (SS0-SS3).

The switch matrix returns are input at A1P5, buffered by U19 and U20 and then input to U4. Discrete inputs are provided at A1P5 for the slam, tilt, and test switches.

The connection to the Sound Board (A1P4) is made up of eight sound data lines (SD0-SD7), a return line (SRET), and a reset line (MR).

A reset circuit is configured using U13,U14,R3, and C24. When power is applied to the system, the microprocessor reset pin (U1-40) is held low for approximately 10 milliseconds. The system can also be reset by pressing the switch (SW1) on the board. Whenever a reset occurs the master reset signal (MR) (U18-9) is held low until the display strobe (DSTB) becomes active. At this point the master reset goes high which enables the peripheral IC's on the Display Board and Driver Board to accept data.

A watchdog circuit is employed to monitor both the display digit strobe and the lamp strobe. This circuit is made up of U11,U12,U13,U16,R5,R6,R29, R32,R33,C20,C21,C28, and C29. If either the display strobe or the lamp strobe is missing for 330 milliseconds the system will be reset. The system will also be reset if the supply voltage drops below 4vdc. This voltage monitor is configured using U21,VR1,D1,D2,R34, and R35.

IV. THEORY OF OPERATION

B. POWER SUPPLY (A2)

The transformer panel delivers 12vdc to the input of the power supply. The regulated output voltage should be set to 5vdc by using potentiometer R3. This voltage is then supplied to the Control Board (A1), Driver Board (A3), Display Board (A4), Sound Board (A6), and any other auxillary board which may require it.

C. DRIVER BOARD (A3)

Two voltages are supplied to this board at A3P1. The 5vdc is supplied from the Power Supply (A2) and the 20vdc is supplied from the transformer panel. The 20vdc is used to source the controlled lamps and the switch matrix. The Driver Board receives its data at A3P2 from the Control Board (A1P2). Solenoid data is latched into U1-U4. Lamp return data is latched into U5. Lamp and switch strobe data is shifted through U6 and U7. The comparators (U10,U11) are used to protect the MOSFETS (Q33-Q49). If a sensed input voltage exceeds the reference voltage (Vref), the corresponding MOSFET is turned off immediately following the lamp clear pulse (LCLR) supplied by U12 thus limiting the duty cycle. If the master reset signal (MR) is held low all lamps and solenoids will be disabled.

D. DISPLAY BOARD (A4)

Several voltages are input to this board at A4P1. The power supply (A2) supplies 5vdc (Vcc). The board develops Vgg from the 35vac supplied from the transformer panel. The transformer panel also sources 8.8vac to the display filaments. The display filaments are biased 9.1vdc above ground by the zener diode VR1.

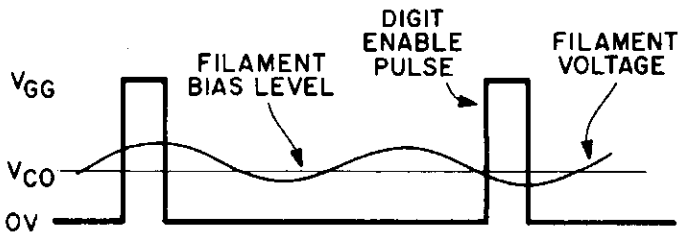

Figure 2. Display Waveform

The Display Board incorporates two vacuum fluorescent display tubes (DSP1,DSP2). The tube's digits are driven by U9. The segments (a-n) of the upper display are driven by U3,U4,U7, and U8. The segments of the lower display are driven by U1,U2,U5, and U6. Figure 1 shows the basic display waveform. Data is sent from the Control Board (A1P3) to the Display Board (A4P2).

E. SOUND BOARD (A6)

The Sound Board consists of two 6502 microprocessor systems, a dual DAC, input ports to receive commands from the game Control Board, and a low level audio output, which is sent to the Auxiliary Power Supply Board for amplification.

The Sound Board requires three supply voltages +5V DC, +12V DC and -12V DC. In addition a power up reset signal is required from the Control Board.

SYSTEM CLOCK

A 4 MHz oscillator is configured with R11, R12, C14, C15, C22, XTAL-1 and T1. This 4MHz clock is divided by 4 to a 1 or 2 MHz clock for both processors clock input, pin 37 of N1 and T3. A 250 KHz signal from S1 pin 11 is the clock for the programmable timer section consisting of N5, H5, T5 and K5, pin 2.

INPUT CODE LATCH SYSTEM

Eight input lines from the Control Board come in on A6P1 and are pulled up by S1P1 and sent to the two input code latches A3 and B2, one for each microprocessor system. A2, pin 8,becomes a logic high when any of it's inputs are low. this output is connected to pin 11 of the input code latches (A3 and B2). A positive edge at pin 11 causes A3 and B2 to latch the data at their inputs. A2 pin 8 is also connected to the clock inputs of two flip flops, A4 pin 3 and A4 pin 11. When A2 pin 8 goes high, both flip flops are clocked, setting both $\bar{Q}$ outputs low. The $\bar{Q}$ outputs, A4 pin 6 and pin 8, are connected to both of the 6502's active low interrupt request lines,

T3 and N1, pin 4. The $\overline{Q}$ outputs of A4 will stay low until the associated 6502 reads its input port therefore clearing the interrupt.

SYSTEM EPROMS

The sound board is designed to accommodate different types of EPROMS. Jumpers JP1, 2, 3, and 4 should be set to the proper position based on the EPROM being used, (See Schematic Diagram).

RESET

The Sound Board receives an external reset signal from A1P4 pin 10. This active low reset signal is pulled up by R34 and sent to G5, pin 1 (2-input AND gate). However, if a manual reset is desired, pushing switch SW2 will reset the processor.

MAIN SUMMER

The main summer consists of R13 through R17 and B1, pins 12, 13 and 14. B1 pin 14 is the main output from the Sound Board, at A6P2 pin 9, and will swing plus or minus 5 V peak to peak.

F. AUXILIARY SOUND BOARD (A20)

The Auxiliary Sound Board consists of a YM2151 (U1) sound generator, a YM3014 (U2) DAC, and a LM324 op-amp (U3). The master Sound Board (A6), controls the YM2151 (U1) sound chip by sending commands via the data bus of the master Sound Board's T3 micro-processor. The YM2151 responds to these commands and serially sends sound data to the YM3014 DAC by means of the CLK, SD, and SH2 lines. The DAC converts this serial data into an analog signal which is buffered and amplified by U3, a LM324 op-amp. This analog signal is then sent back to the main summer of the master Sound Board (A6).

G. SENSOR BOARD (A15)

This board is used to detect if any flipper is energized and then inputs the data to the Control Board to be processed. This board therefore eliminates the need for a second switch to be used on the flipper assembly itself. U1 is an optocoupler device which converts the input signal from the flipper circuit when energized to a signal which can be recognized by the Control Board as a valid switch closure.

H. LED DISPLAY BOARD (A23)

This board is used to display runs scored by each player. Two voltages are supplied at A23P1. The 5vdc supplies power to the IC's while the 12vdc supplies power for the LED displays. The multiplexed data is sent from the Control Board (A1P6) to the LED Display Board (A23P1). Data lines DX0-DX3 output the bcd character data (0-9) to the 7-segment decoder (U3). Data lines DX4-DX6 output the active digit data to the latched decoder (U1). The latch signal is provided by AX4.

V. GENERAL INFORMATION

A. PRINTED CIRCUIT BOARDS ARE DESIGNATED AS FOLLOWS:

A1 - Control Board
A2 - Power Supply
A3 - Driver Board
A4 - Display Board
A5 - Auxiliary Power Supply
A6 - Sound Board
A13 - Resistor Board
A15 - Sensor Board
A17 - Diode Board
A20 - Auxiliary Sound Board
A22 - Playboard Lamp Board
A23 - LED Display Board

Printed circuit board connectors will be labeled AX-JX. For example, A3-J4 is the connector J4 to the driver board (A3).

B. WIRE COLORS ARE SHOWN AS NUMBERS:

0 Black
1 Brown
2 Red
3 Orange
4 Yellow
5 Green
6 Blue
7 Violet
8 Gray
9 White

For example, 688 is a BLUE-GRAY-GRAY striped wire.

C. FUSE AND COIL INFORMATION

TRANSFORMER PANEL

F1	Line Input	110V AC....8 Amp SLO-BLO
		220V AC....4 Amp SLO-BLO
F2	Primary Power	110V AC....5 Amp SLO-BLO
		220V AC....2.5 Amp SLO-BLO
F3	Display Filament	1/2 Amp
F4	Display Filament	1/2 Amp
F5	Displays	1/4 Amp SLO-BLO
F6	Power Supply	4 Amp SLO-BLO
F7	Controlled Lamps	10 Amp SLO-BLO
F8	Solenoids	8 Amp SLO-BLO
F9	Playfield Illumination	6-1/4 AMP SLO-BLO
F10	Lightbox Illumination	6-1/4 AMP SLO-BLO
F11	Auxiliary Power Supply	1/2 Amp

NOTE:
FUSE DESIGNATIONS F12 THRU F14 NOT USED.

V. GENERAL INFORMATION

PLAYBOARD FUSES, COILS/COLORS

FUSE	RATING	PART NO.	USAGE	COIL/COLOR
F15	1-1/2 Amp SLO-BLO	EL-24	Left Pop Bumper	16570 (Green)
F16	1-1/2 Amp SLO-BLO	EL-24	Right Pop Bumper	16570 (Green)
F17	1-1/2 Amp SLO-BLO	EL-24	Center Pop Bumper	16570 (Green)
F18	1-1/2 Amp SLO-BLO	EL-24	Bottom Pop Bumper	16570 (Green)
F19	1-1/2 Amp SLO-BLO	EL-24	Kicking Target	5195 (White)
F20	1-1/2 Amp SLO-BLO	EL-24	Kicking Rubber	5195 (White)
F21	1 Amp SLO-BLO	EL-6	Ball Release Outhole Right Hole Kicker Left Hole Kicker 3 Bank Reset	26451 (Yellow) 26451 (Yellow) 26450 (Pink) 26450 (Pink) 26926 (Blue)
F22	2 Amp SLO-BLO	EL-7	Kick Save	19300 (Orange)

SERVICE NOTES

VI. WIRING AND SCHEMATIC DIAGRAMS, PARTS LISTS

TABLE OF CONTENTS

PAGE(S)

CONTROL BOARD (A1)
COMPONENT LOCATION AND PARTS LIST.....24
SCHEMATIC DIAGRAM.....25-27

DRIVER BOARD (A3)
SCHEMATIC DIAGRAM.....28-30
COMPONENT LOCATION AND PARTS LIST.....31

DIODE BOARD (1A17)
COMPONENT LOCATION AND PARTS LIST.....32

DIODE BOARD (2A17)
COMPONENT LOCATION AND PARTS LIST.....32

RESISTOR BOARD (1A13)
COMPONENT LOCATION AND PARTS LIST.....32

RESISTOR BOARD (2A13)
COMPONENT LOCATION AND PARTS LIST.....32

SENSOR BOARD (A15)
COMPONENT LOCATION AND PARTS LIST.....33
SCHEMATIC DIAGRAM.....33

AUXILIARY POWER SUPPLY (A5)
COMPONENT LOCATION AND PARTS LIST.....34
SCHEMATIC DIAGRAM.....34

AUXILIARY SOUND BOARD (A20)
COMPONENT LOCATION AND PARTS LIST.....35
SCHEMATIC DIAGRAM.....35-36

SOUND BOARD (A6)
COMPONENT LOCATION AND PARTS LIST.....37
SCHEMATIC DIAGRAM.....38-39

DISPLAY BOARD (A4)
COMPONENT LOCATION AND PARTS LIST.....40

SCHEMATIC DIAGRAM.....41-42

LED DISPLAY BOARD (A23)
COMPONENT LOCATION AND PARTS LIST.....43
SCHEMATIC DIAGRAM.....43-44

SWITCH MATRIX
SCHEMATIC DIAGRAM.....44-45

POWER SUPPLY (A2)
COMPONENT LOCATION AND PARTS LIST.....46
SCHEMATIC DIAGRAM.....46

LAMP MATRIX
SCHEMATIC DIAGRAM.....47-48

PLAYBOARD
SCHEMATIC DIAGRAM.....49-50

TRANSFORMER PANEL
SCHEMATIC DIAGRAM.....51-52

CABINET/LIGHTBOX
SCHEMATIC DIAGRAM.....53-54

VI. WIRING AND SCHEMATIC DIAGRAMS, PARTS LISTS

CONTROL BOARD (A1) COMPONENT LOCATION

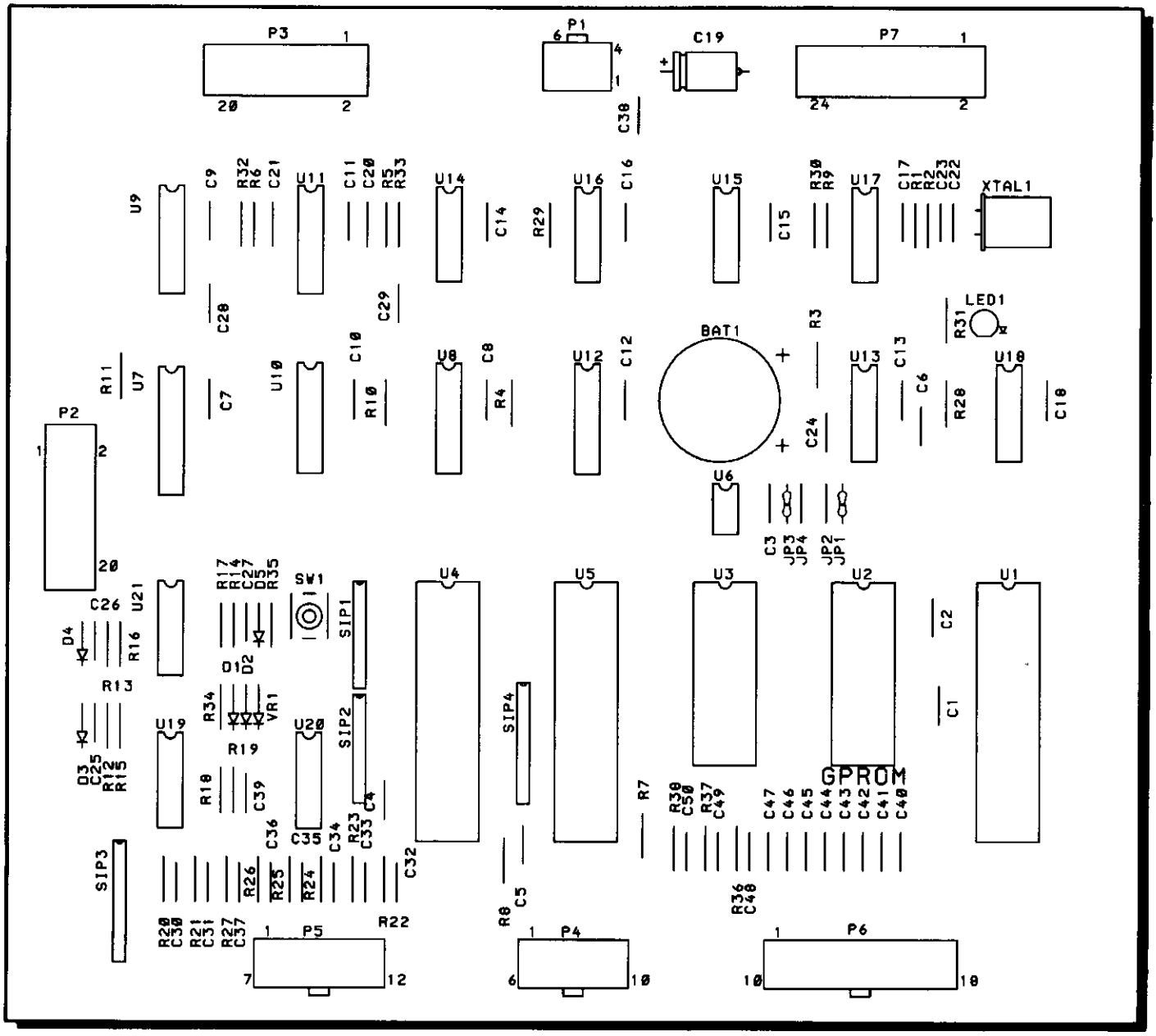

CONTROL BOARD (A1) PARTS LIST

REFERENCE	DESCRIPTION	PART NUMBER
	Control Board Assembly (A1)	MA-1423
BAT 1	Lithium Battery, LM2430, 3V	X0-925
C3, C7-C18, C30-C50	Capacitor, .01UF, +80% -20%, 50V	X0-229
C1,C2,C4 C5,C25,C27	Capacitor, 0.1UF, +80% -20%, 50V	X0-230
C6,C22,C23	Capacitor, 33PF, 10%, 50V	X0-896
C19	Capacitor, 100UF, +80% -20%, 10V	X0-211
C20,C21	Capacitor, 1UF, 20%, 50V	X0-746
C24	Capacitor, .022UF, 10%, 50V	X0-873
C28,C29	Capacitor, 1000PF, 10%, 100V	X0-296
D1-D5	Diode, 1N4148	X0-261
LED 1	LED, MV5752 (Red)	X0-270
R1	Resistor, 22 MEGOHM, 5%, 1/4W	X0-74
R2,R10,R11 R18,R28,R30	Resistor, 10K OHM, 5%, 1/4W	X0-18
R3	Resistor, 560K OHM, 5%, 1/4W	X0-169
R5,R6	Resistor, 330K OHM, 5%, 1/4W	X0-47
R4,R7-R9	Resistor, 3K OHM, 5%, 1/4W	X0-23
R12-R14	Resistor, 2.2K OHM, 5%, 1/4W	X0-27
R15-R17	Resistor, 3.3K OHM, 5%, 1/4W	X0-38
R19-R27, R36-R38	Resistor, 4.7K OHM, 5%, 1/4W	X0-7
R31	Resistor 330 OHM, 5%, 1/4W	X0-34
R32-R33	Resistor, 100K OHM, 5%, 1/4W	X0-45
R34	Resistor, 1K OHM, 5%, 1/4W	X0-5
R35	Resistor, 100 OHM, 5%, 1/4W	X0-28
SIP1,SIP2	Resistor Pack, 10K OHM X 7, 5%, 1/4W	X0-926
SIP3,SIP4	Resistor Pack, 4.7K OHM X 8	X0-161
SW1	Switch, N.O.	X0-897
U1	IC, 65C02P2, CPU, 2MHZ	X0-927
U3	IC, 6116LP, 2K X 8, Static Ram	X0-928
U4,U5	IC,6522AP, Versatile Interface Adaptor (VIA)	X0-929
U6	IC, DS1210, Non-Volatile Controller	X0-930
U7	IC, 74HCT373, Octal Latch	X0-931
U8	IC, 74HCT138, Decoder	X0-932
U9,U10	IC, 74HCT139, Dual Decoder	X0-933
U11	IC, 74HC123, Dual Multivibrator	X0-934
U12	IC, 74HC161, Binary Counter	X0-935
U13	IC, 74HC14, Schmitt Hex Inverters	X0-936
U14	IC, 74HC11, Triple "And" Gates	X0-937
U15,U16	IC, 74HC00, Quad "Nand" Gates	X0-782
U17	IC, 74HC04, Hex Inverters	X0-888
U18	IC, 74HC74, Dual "D" Flip-Flop	X0-939
U19,U20,U21	IC, LM339, Quad Comparators	X0-583
VR1	Zener Diode, 1N5225B, 3V, 5%	X0-269
XTAL1	Crystal, 4MHZ	X0-366
A1P1	Header, 6 Position	X0-910
A1P2,A1P3	Header, 20 Position (Ribbon)	X0-940
A1P4	Header, 10 Position	X0-912
A1P5	Header, 12 Position	X0-913
A1P6	Header. 18 Position	X0-916
	Jumper, Resistor, 0 OHM (2)	X0-469
	Socket, 28 Pin Dip	X0-536

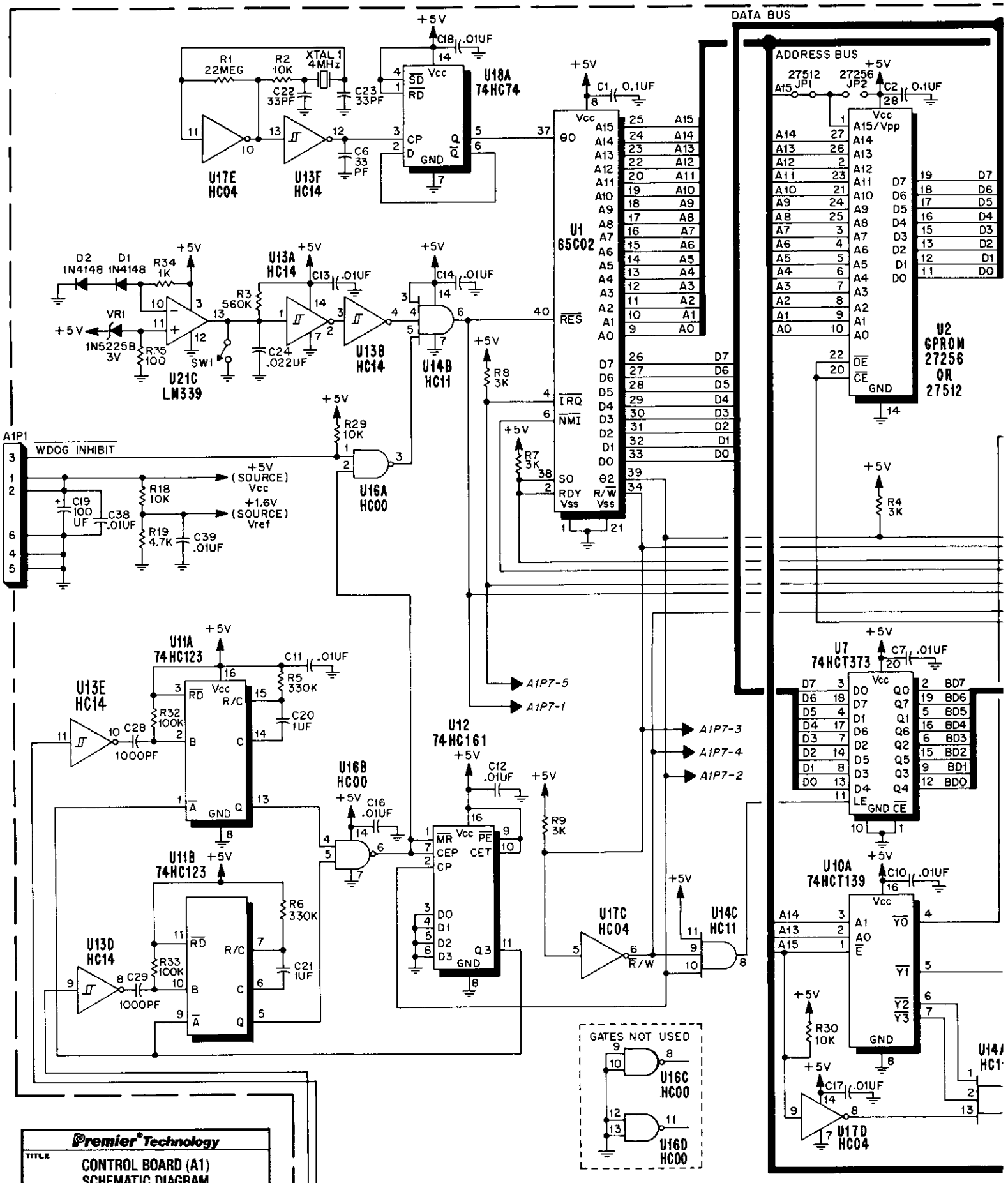

Premier Technology			
TITLE: CONTROL BOARD (A1) SCHEMATIC DIAGRAM			
DRAWN	APPROVED	DATE	E-27033
	RHM	10-12-89	

VI. WIRING AND SCHEMATIC DIAGRAMS, PARTS LISTS

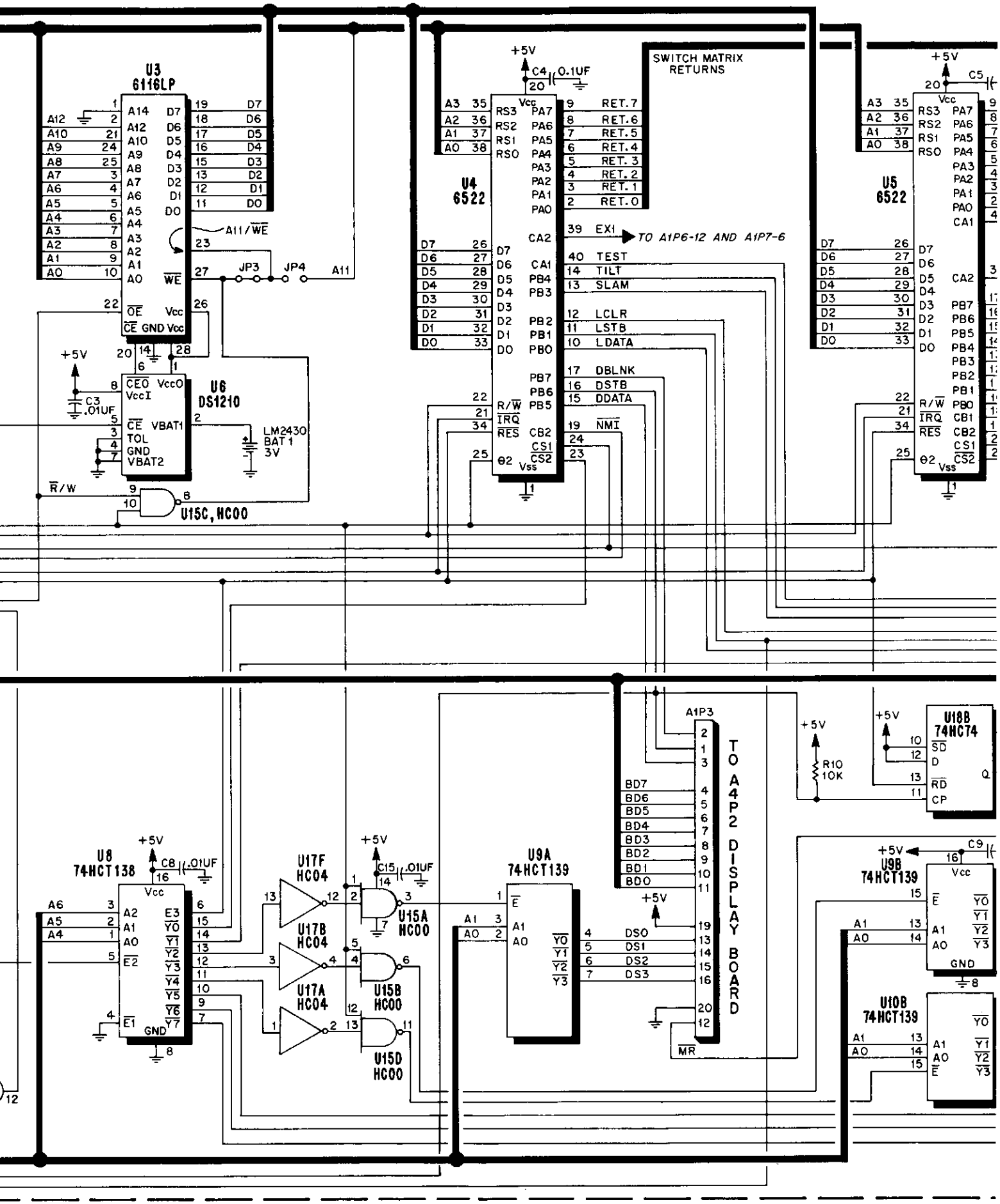

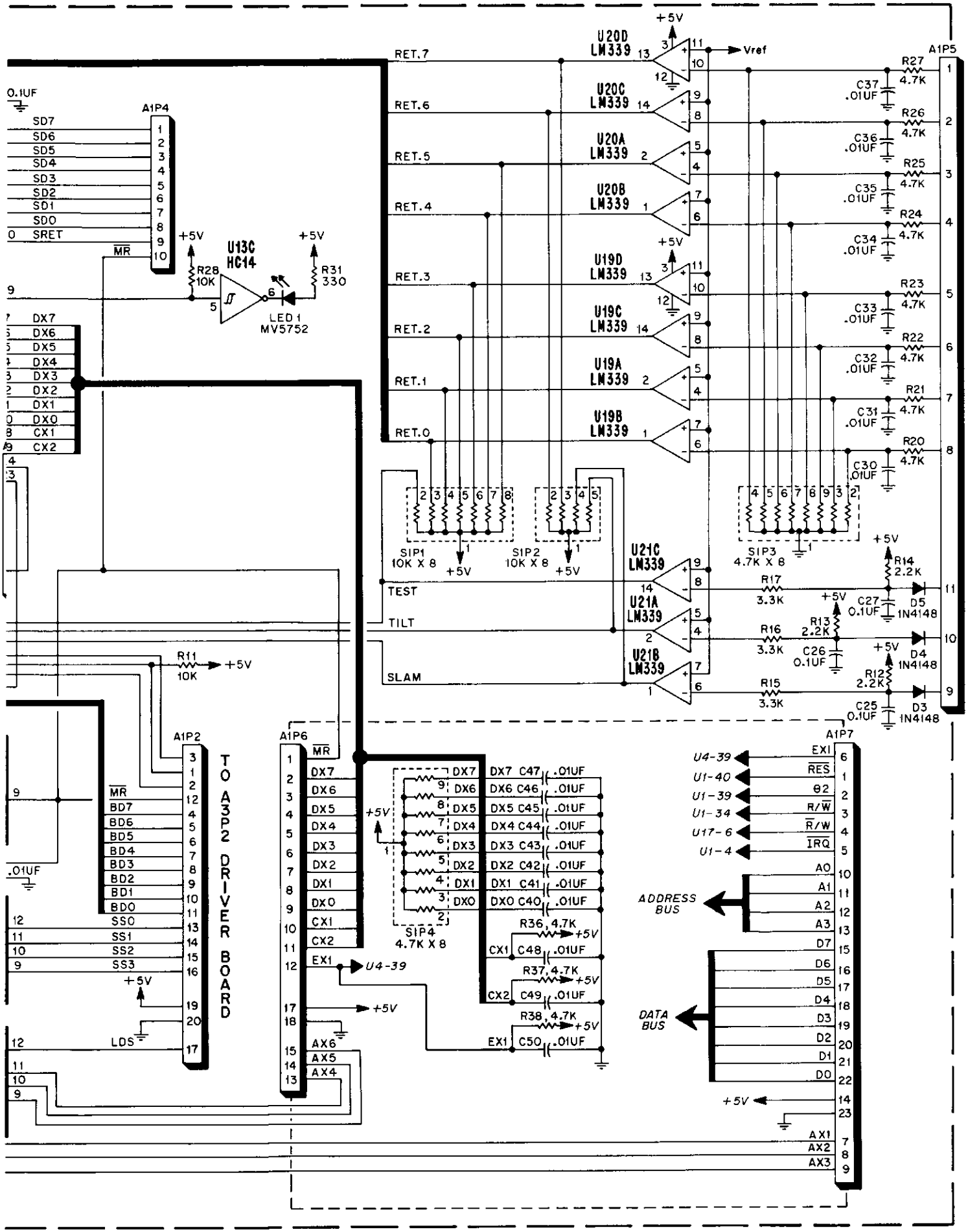
A1P4
SD7
SD6
SD5
SD4
SD3
SD2
SD1
SD0
SRET
MR
0.1UF
+5V
U13C
HC14
R28
10K
R31
330
LED1
MV5752
DX7
DX6
DX5
DX4
DX3
DX2
DX1
DX0
CX1
CX2
RET.7
RET.6
RET.5
RET.4
RET.3
RET.2
RET.1
RET.0
U20D
LM339
U20C
LM339
U20A
LM339
U20B
LM339
U19D
LM339
U19C
LM339
U19A
LM339
U19B
LM339
Vref
A1P5
R27
4.7K
C37
.01UF
R26
4.7K
C36
.01UF
R25
4.7K
C35
.01UF
R24
4.7K
C34
.01UF
R23
4.7K
C33
.01UF
R22
4.7K
C32
.01UF
R21
4.7K
C31
.01UF
R20
4.7K
C30
.01UF
SIP1
10K X 8
SIP2
10K X 8
SIP3
4.7K X 8
TEST
TILT
SLAM
U21C
LM339
U21A
LM339
U21B
LM339
R14
2.2K
D5
1N4148
R17
3.3K
C27
0.1UF
R13
2.2K
D4
1N4148
R16
3.3K
C26
0.1UF
R12
2.2K
D3
1N4148
R15
3.3K
C25
0.1UF
R11
10K
A1P2
A1P6
A1P7
TO A3P2 DRIVER BOARD
BD7
BD6
BD5
BD4
BD3
BD2
BD1
BD0
SS0
SS1
SS2
SS3
LDS
AX6
AX5
AX4
EX1
U4-39
SIP4
4.7K X 8
R36, 4.7K
R37, 4.7K
R38, 4.7K
C47 .01UF
C46 .01UF
C45 .01UF
C44 .01UF
C43 .01UF
C42 .01UF
C41 .01UF
C40 .01UF
C48 .01UF
C49 .01UF
C50 .01UF
U4-39
U1-40
U1-39
U1-34
U17-6
U1-4
EX1
RES
θ2
R/W
R/W
IRQ
ADDRESS BUS
DATA BUS
A0
A1
A2
A3
D7
D6
D5
D4
D3
D2
D1
D0
AX1
AX2
AX3

IRL530
TONY

100V 12 L

100V 12 AM LOGIC LEV

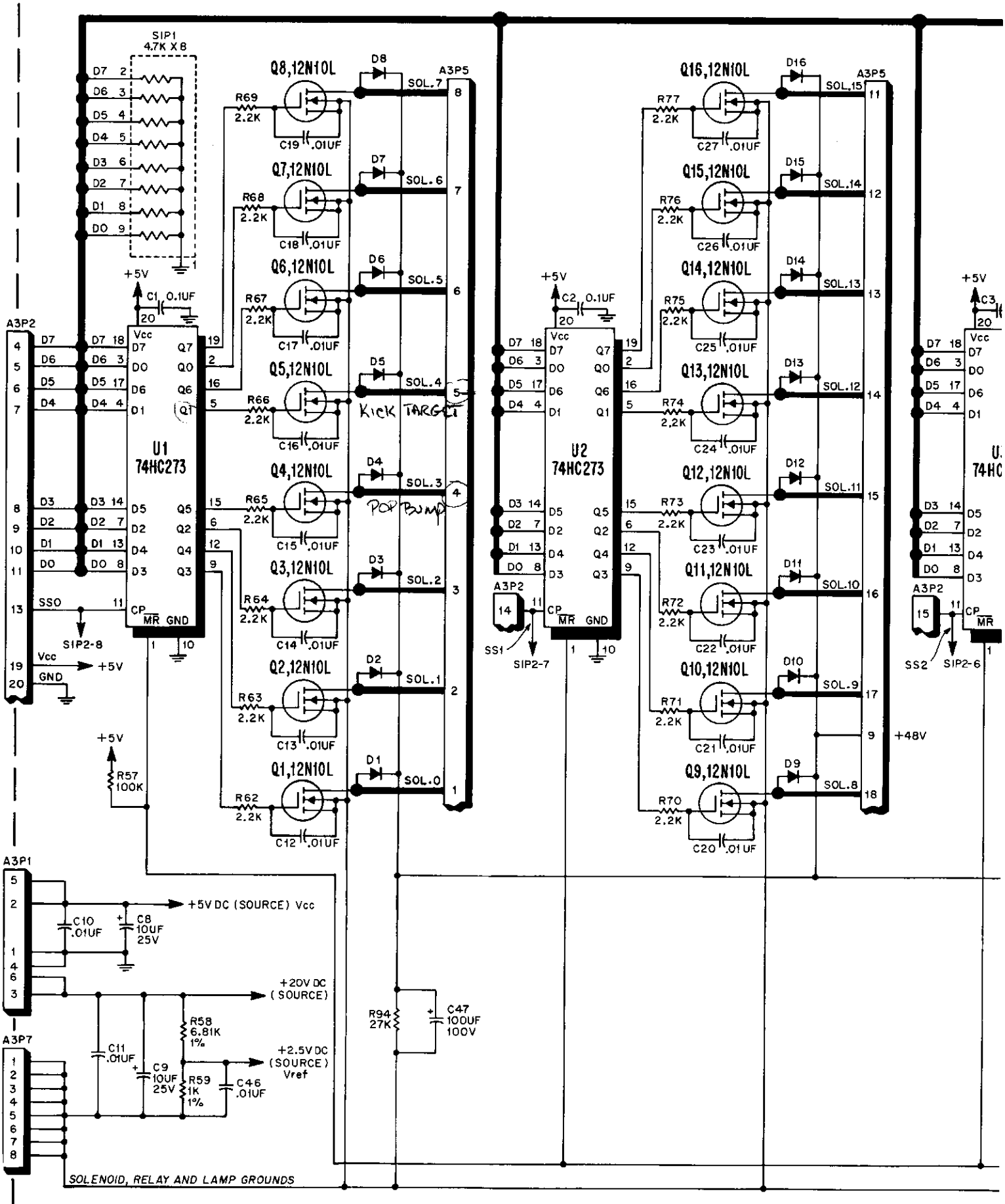

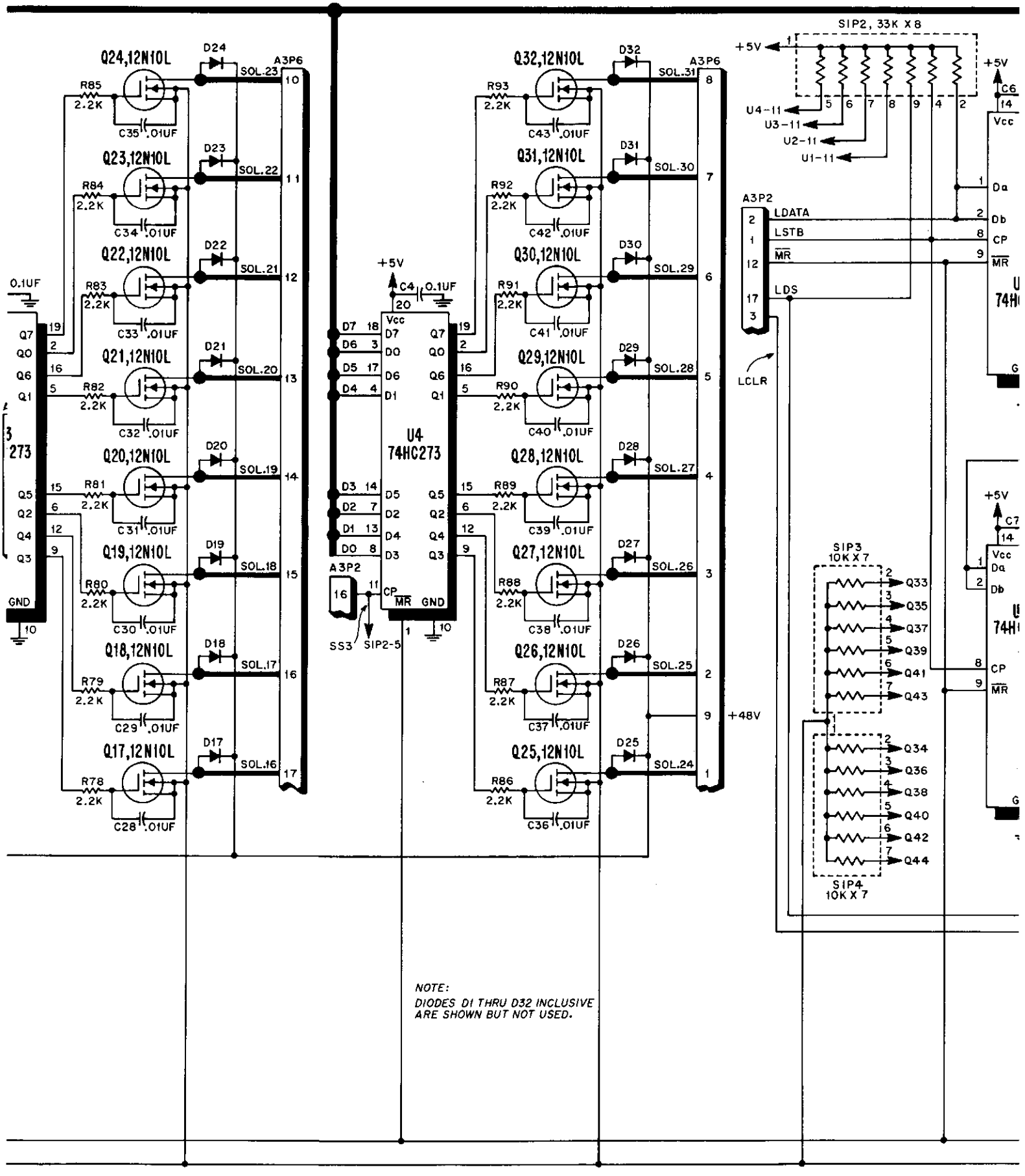

NOTE:
DIODES D1 THRU D32 INCLUSIVE ARE SHOWN BUT NOT USED.

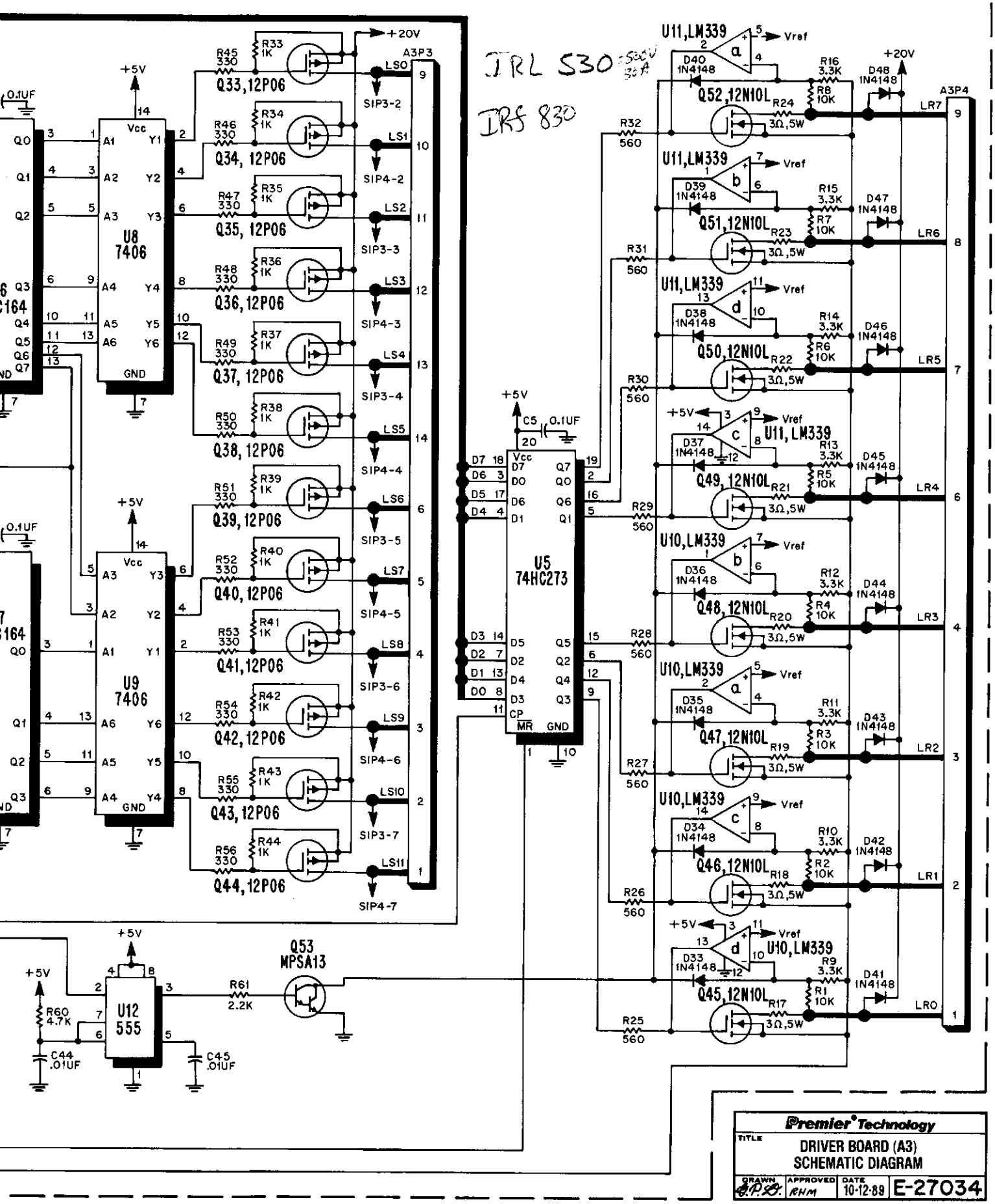

Premier Technology			
TITLE: DRIVER BOARD (A3) SCHEMATIC DIAGRAM			
DRAWN: A.P.S.	APPROVED: RHM	DATE: 10-12-89	E-27034

VI. WIRING AND SCHEMATIC DIAGRAMS, PARTS LISTS

DRIVER BOARD (A3) COMPONENT LOCATION

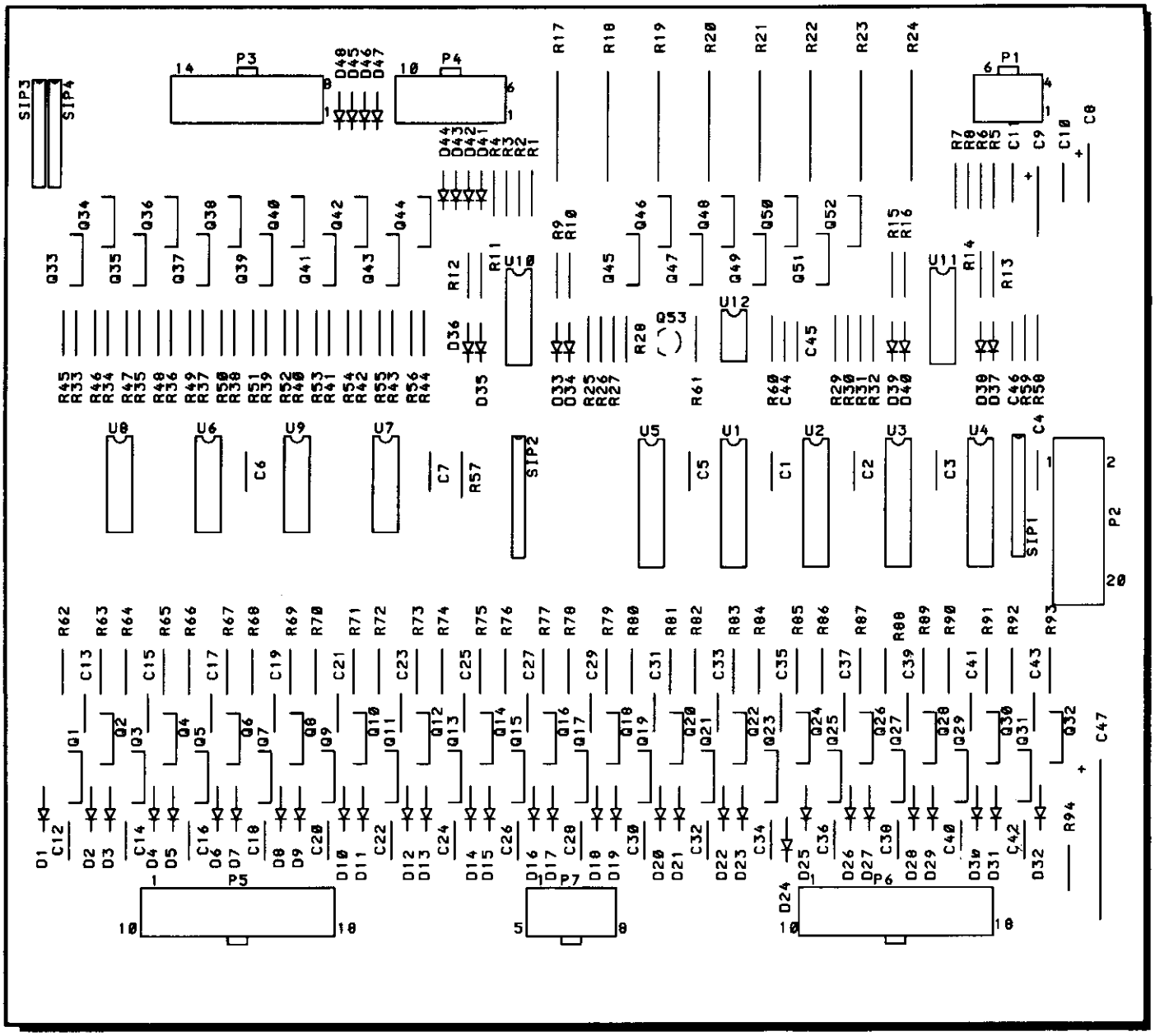

DRIVER BOARD (A3) PARTS LIST

REFERENCE	DESCRIPTION	PART NUMBER
	Driver Board Assembly (A3)	MA-1358
C1-C7	Capacitor, 0.1 UF, +80% -20%, 50V	XO-230
C8	Capacitor, 10UF, 20%, 25V	XO-127
C9	Capacitor, 10UF, +80% -20%, 25V	XO-225
C10,C11	Capacitor, .01UF, +80% -20%, 50V	XO-229
C45,C46		
C12-C44	Capacitor, .01UF, 10%, 50V	XO-696
C47	Capacitor, 100UF, 20%, 100V	XO-958
D33-D48	Diode, 1N4148	XO-261
Q1-Q32,	Transistor, RFP12N10L,	XO-947
Q45-Q54	N-Channel MOSFET	
Q33-Q44	Transistor, RFP12P06,	XO-948
	P-Channel MOSFET	
Q53	Transistor, MPSA13, Darlington	XO-304
R1-R8	Resistor, 10K Ohm, 5%, 1/4W	XO-18
R9-R16	Resistor, 3.3K Ohm, 5%, 1/4W	XO-38
R17-R24	Resistor, 3 Ohm, 5%, 5W	XO-942
R25-R32	Resistor, 560 Ohm, 5%, 1/4W	XO-36
R33-R44	Resistor, 1K Ohm, 5%, 1/4W	XO-5
R45-R56	Resistor, 330 Ohm, 5%, 1/4W	XO-34
R57	Resistor, 100K Ohm, 5%, 1/4W	XO-45

REFERENCE	DESCRIPTION	PART NUMBER
R58	Resistor, 6.81K Ohm, 1%, 1/4W	XO-943
R59	Resistor, 1K Ohm, 1%, 1/4W	XO-944
R60	Resistor, 4.7K Ohm, 5%, 1/4W	XO-7
R61-R93	Resistor, 2.2K Ohm, 5%, 1/4W	XO-27
R94	Resistor, 27K Ohm, 5%, 1/4W	XO-11
SIP1	Resistor Pack, 4.7K Ohm X 8,5%, 1/4W	XO-161
SIP2	Resistor Pack, 33K Ohm X 8,5%, 1/4W	XO-945
SIP3	Resistor Pack, 10K Ohm X 7,5%, 1/4W	XO-926
SIP4		
U1-U5	IC, Octal "D" Flip-Flops, 74HC273	XO-949
U6-U7	IC, Shift Register, 74HC164	XO-950
U8-U9	IC, Buffer, 7406	XO-85
U10-U11	IC, Quad Comparator, LM339	XO-583
U12	IC, Timer, NE555	XO-631
A3P1	Header, 6 Position	XO-910
A3P2	Header, 20 Position (Ribbon)	XO-940
A3P3	Header, 14 Position	XO-914
A3P4	Header, 10 Position	XO-912
A3P5,	Header, 18 Position	XO-916
A3P6		
A3P7	Header, 8 Position	XO-911

VI. WIRING AND SCHEMATIC DIAGRAMS, PARTS LISTS

DIODE BOARD (A17) COMPONENT LOCATION

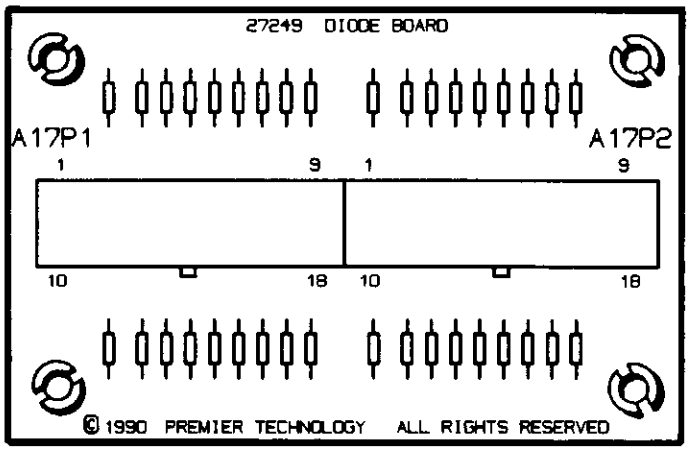

DIODE BOARD (A17) PARTS LIST

REFERENCE	DESCRIPTION	PART NUMBER
1A17	Diode Matrix Assembly	MA-1448
D1-D32	Diode, 1N4148	X0-261
P1,P2	Header, 18 Position	X0-916
R1-R4	Resistor, 220 OHM, 5%, 1/4W	X0-21
	Circuit Board Support (4)	23984

DIODE BOARD (A17) COMPONENT LOCATION

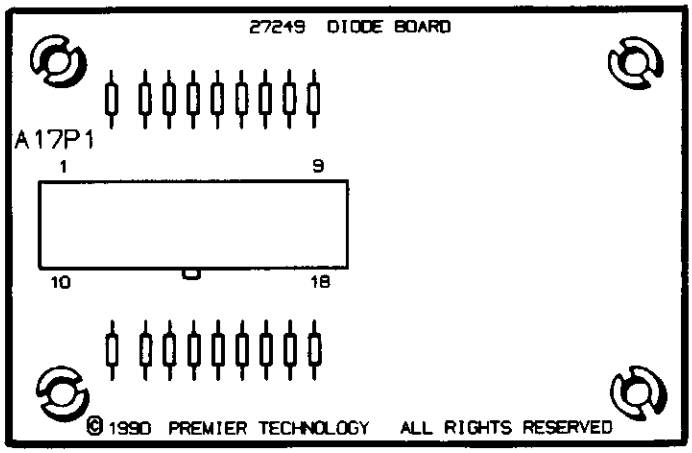

DIODE BOARD (A17) PARTS LIST

REFERENCE	DESCRIPTION	PART NUMBER
2A17	Diode Matrix Assembly	MA-1449
D1-D16	Diode 1N4148	X0-261
P1	Header, 18 Position	X0-916
R1,R2	Resistor, 220 OHM, 5%, 1/4W	X0-21
	Circuit Board Support (4)	23984

RESISTOR BOARD (A13) COMPONENT LOCATION

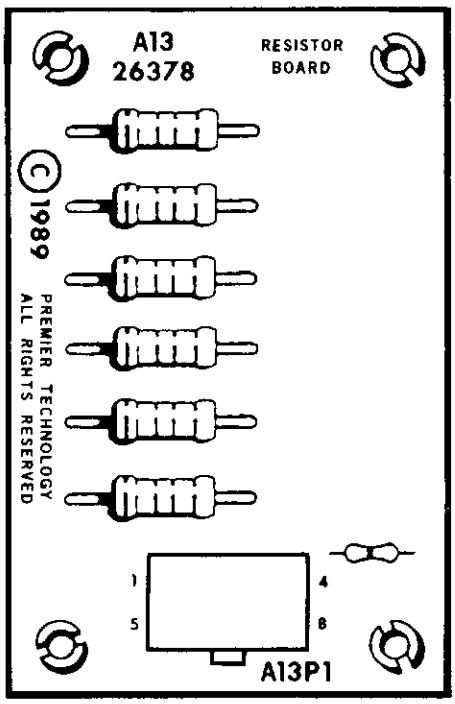

RESISTOR BOARD (A13) PARTS LIST

REFERENCE	DESCRIPTION	PART NUMBER
1A13	Resistor Board Assembly	MA-1461
R1-R6	Resistor, 6.6 OHM, 5%, 5W	X0-960
JP1	Jumper, Resistor, 0 OHM	X0-469
P1	Header, 8 Position	X0-911
	Circuit Board Support (4)	23984

RESISTOR BOARD (A13) COMPONENT LOCATION

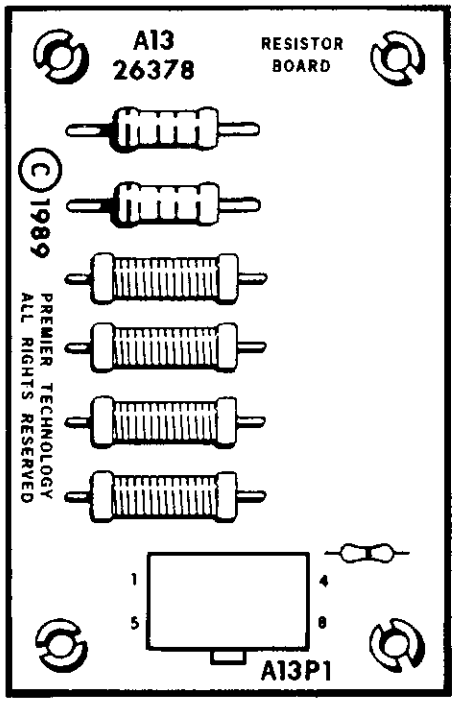

RESISTOR BOARD (A13) PARTS LIST

REFERENCE	DESCRIPTION	PART NUMBER
2A13	Resistor Board Assembly	MA-1495
R1,R2	Resistor, 6.6 OHM, 5%, 5W	X0-960
R3-R6	Resistor, 3.3 OHM, 5%, 7W	X0-959
JP1	Jumper, Resistor, 0 OHM	X0-469
P1	Header, 8 Position	X0-911
	Circuit Board Support (4)	23984

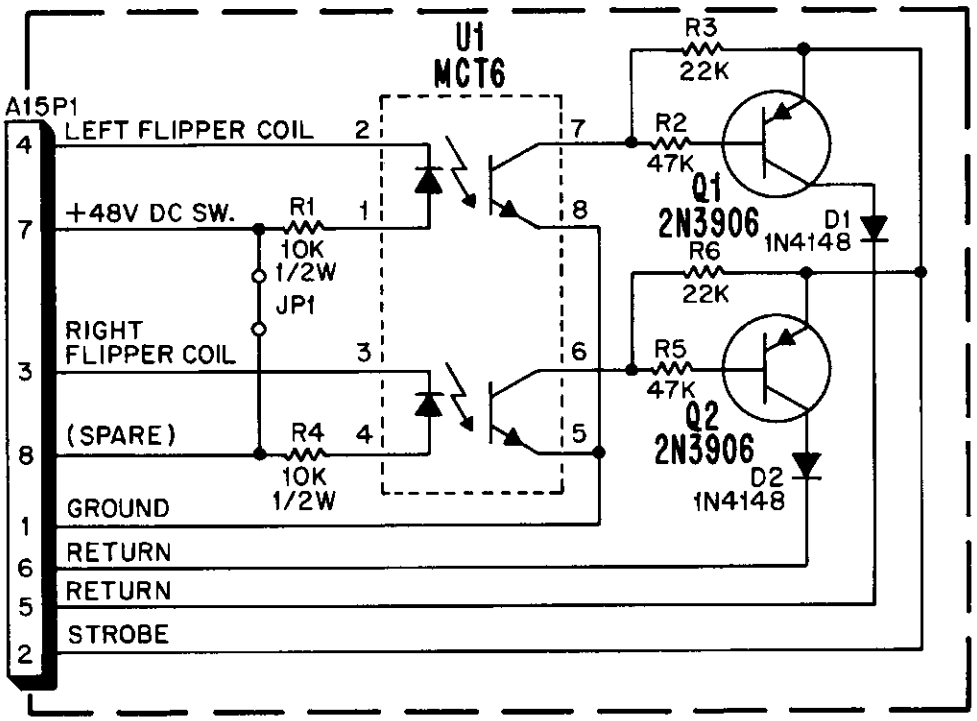

Premier® Technology			
TITLE: SENSOR BOARD (A15) SCHEMATIC DIAGRAM			
DRAWN: G.P.S.	APPROVED: RHM	DATE: 10-12-89	E-27041

SENSOR BOARD (A15) COMPONENT LOCATION

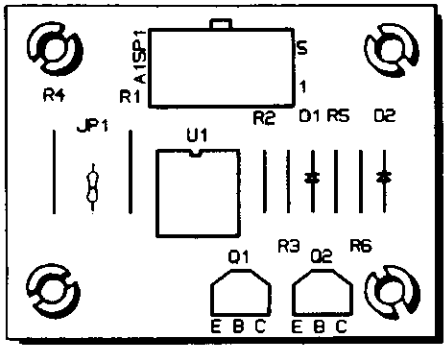

SENSOR BOARD (A15) PARTS LIST

REFERENCE	DESCRIPTION	PART NUMBER
	Sensor Board Assembly (A15)	MA-1334
D1,D2	Diode, 1N4148	XO-261
JP1	Jumper, Resistor, 0 OHM	XO-469
Q1,Q2	Transistor, 2N3906 (PNP)	XO-588
R1,R4	Resistor, 10K Ohm, 5%, 1/2W	XO-62
R2,R5	Resistor, 47K Ohm, 5%, 1/4W	XO-30
R3,R6	Resistor, 22K Ohm, 5%, 1/4W	XO-42
U1	IC, Optocoupler, MCT6	XO-1000
A15P1	Header, 8 Position	XO-911
	Spacer (4)	23984

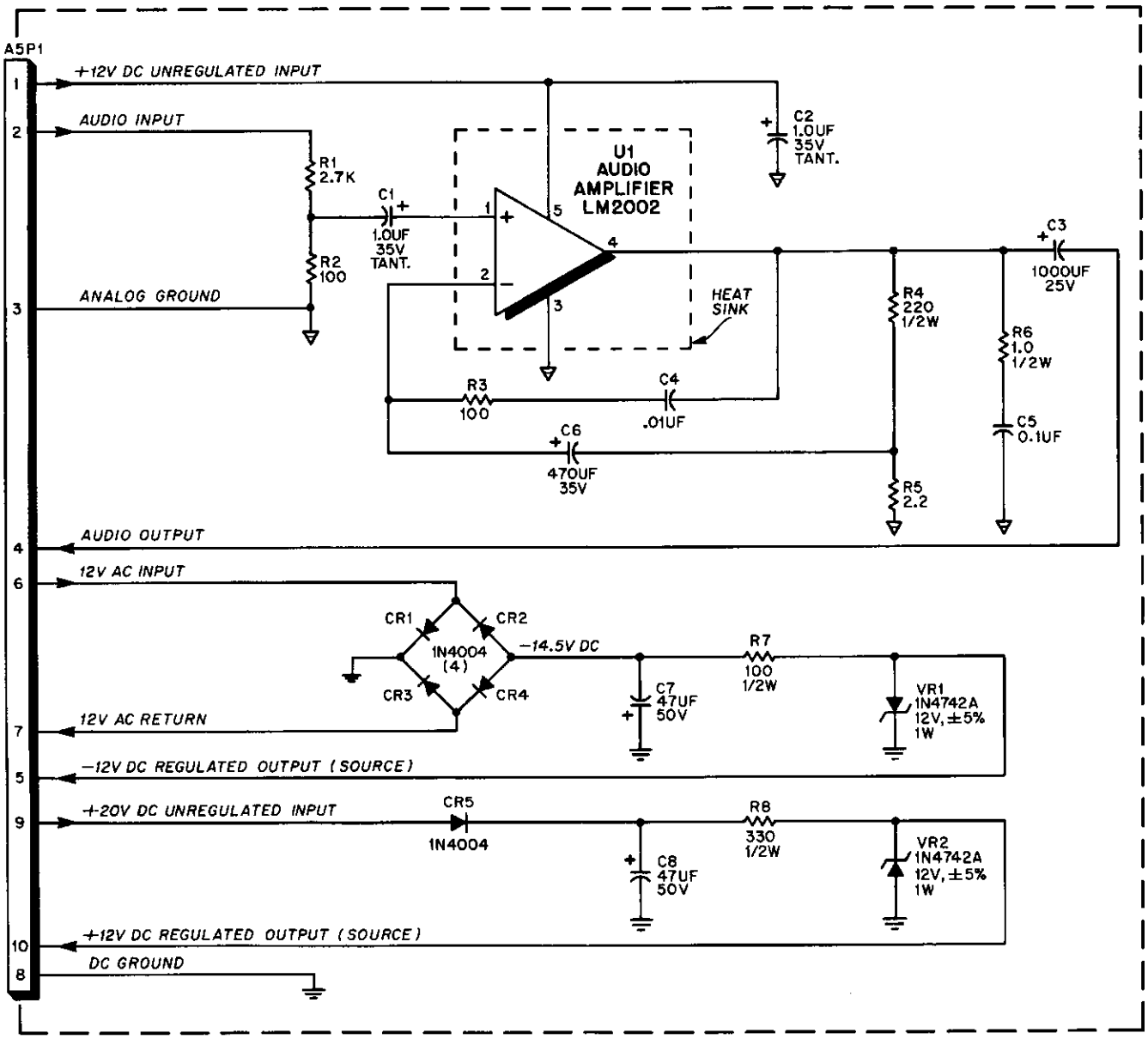

AUXILIARY POWER SUPPLY (A5) COMPONENT LOCATION

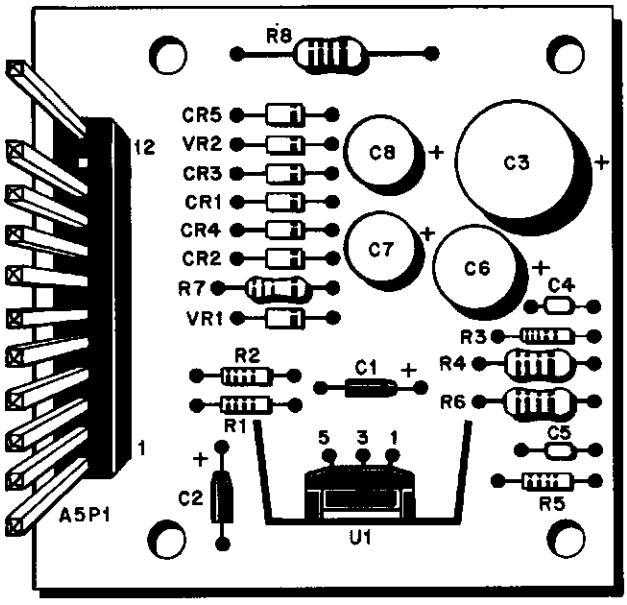

Premier Technology

TITLE			
AUXILIARY POWER SUPPLY (A5) SCHEMATIC DIAGRAM			
DRAWN	APPROVED	DATE	
G.P.S.	RHM	9-OCT-85	E-24715

AUXILIARY POWER SUPPLY (A5) PARTS LIST

REFERENCE	DESCRIPTION	PART NUMBER
	Auxiliary Power Supply	MA-1366
C1,C2	Capacitor, 1UF, 10%, 35V, TANT	XO-715
C3	Capacitor, 1000UF, 25V	XO-874
C4	Capacitor, .01UF, +80% -20%, 50V	XO-229
C5	Capacitor, 0.1UF, +80% -20%, 50V	XO-230
C6	Capacitor, 470UF, 35V	XO-284
C7, C8	Capacitor, 47UF, 50V	XO-210
CR1-CR5	Diode, 1N4004	XO-254
R1	Resistor, 2.7K Ohm, 5%, 1/4W	XO-6
R2,R3	Resistor, 100 Ohm, 5%, 1/4W	XO-28
R4	Resistor, 220 Ohm, 5%, 1/2W	XO-185
R5	Resistor, 2.2 Ohm, 5%, 1/4W	XO-595
R6	Resistor, 1 Ohm, 5%, 1/2W	XO-593
R7	Resistor, 100 Ohm, 5%, 1/2W	XO-52
R8	Resistor, 330 Ohm, 5%, 1/2W	XO-1001
U1	Audio Amplifier, LM2002	XO-550
VR1,VR2	Diode, Zener, 1N4742A, 12V, ±5%,1W	XO-257
	Heat Sink	XO-472
	12 Position Connector	XO-879

AUXILIARY SOUND BOARD (A20) COMPONENT LOCATION

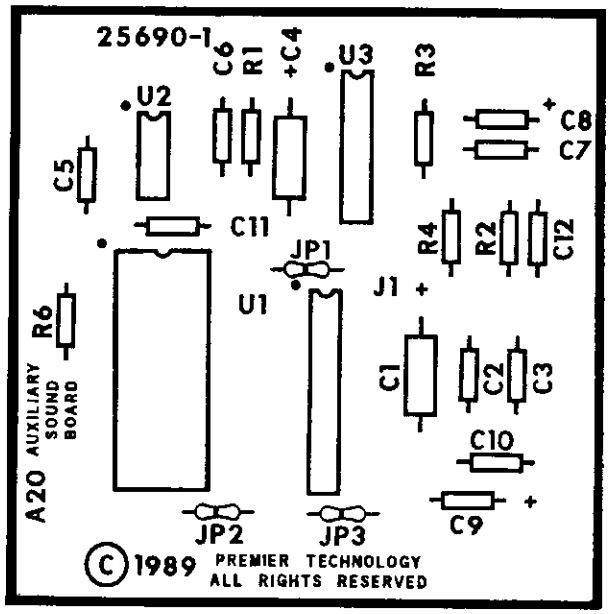

AUXILIARY SOUND BOARD (A20) PARTS LIST

REFERENCE	DESCRIPTION	PART NUMBER
	AUXILIARY SOUND BOARD	MA-1294
C1,C4	CAPACITOR, 10UF, +80%-20%, 16V	XO-846
C2,C3,C5,C6	CAPACITOR, 0.1UF, +80%-20%, 50V	XO-230
C7	CAPACITOR, 1500PF, 5%, 50V	XO-954
C8,C9	CAPACITOR, 4.7UF, 10%, 10V	XO-226
C11	CAPACITOR, 3300PF, 10%, 100V	XO-600
C12	CAPACITOR, 1000PF, 10%, 100V	XO-296
R1	RESISTOR, 10K OHM, 5%, 1/4W	XO-18
R2	RESISTOR, 10K OHM, 1%, 1/4W	XO-956
R3,R6	RESISTOR, 1K OHM, 5%, 1/4W	XO-5
R4	RESISTOR, 1.8K OHM, 5%, 1/4W	XO-37
U1	IC, SOUND CHIP, YM2151	XO-882
U2	IC, SERIAL DAC, YM3014	XO-883
U3	IC, QUAD OP-AMP, MC3403P	XO-953
	JUMPER, RESISTOR, 0 OHM (3)	XO-469
	SOCKET, 20 PIN DIP	XO-491
	SOCKET, 24 PIN DIP	XO-529

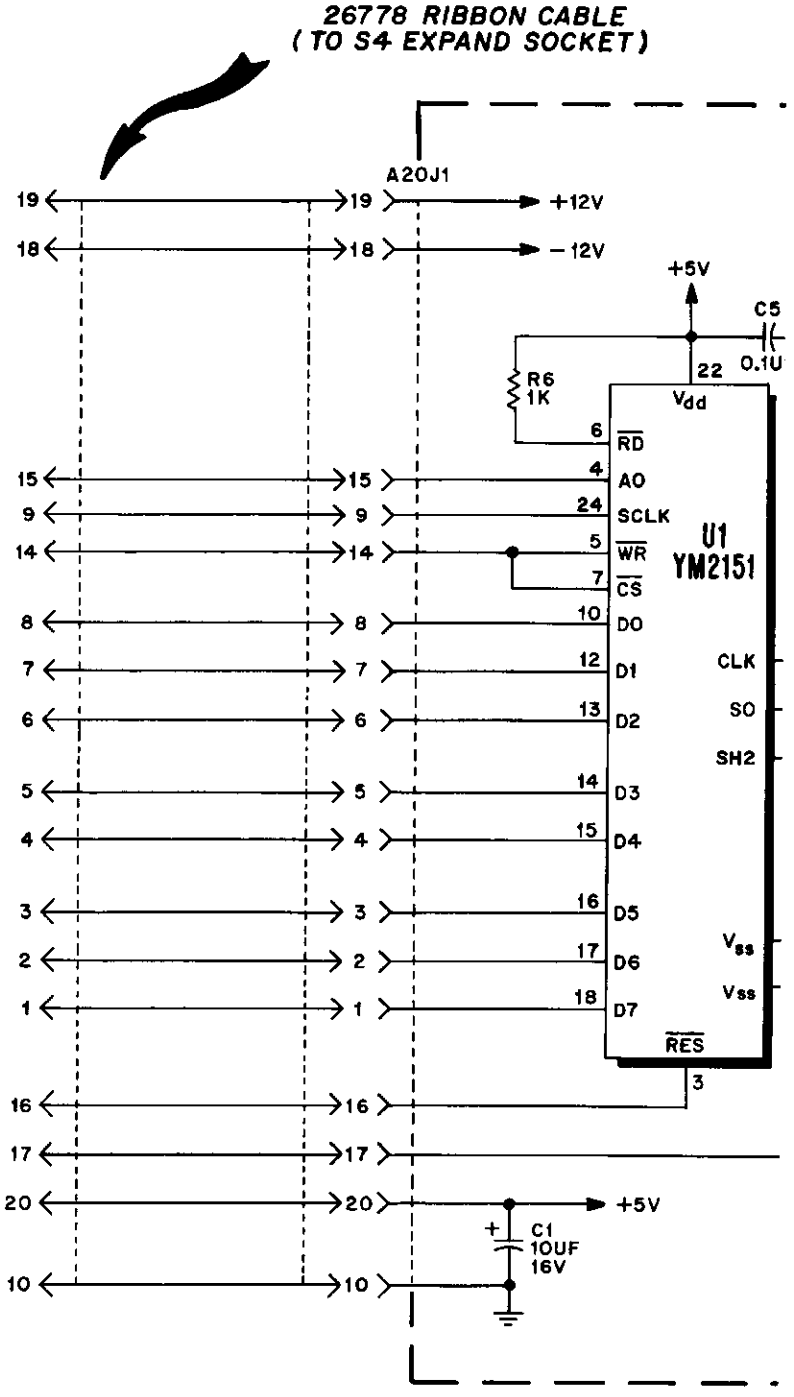

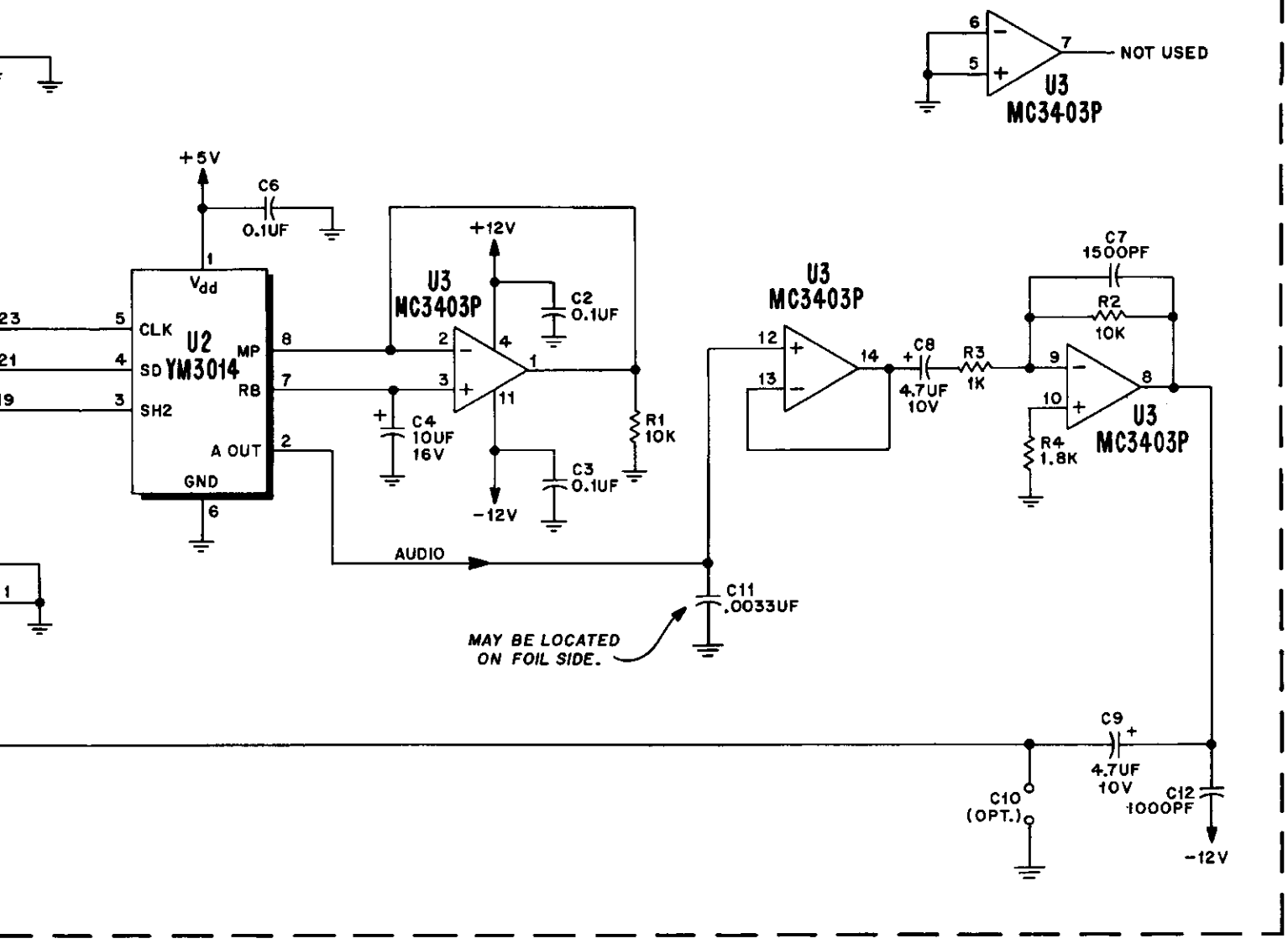

Premier Technology			
TITLE: AUXILIARY SOUND BOARD (A20) SCHEMATIC DIAGRAM			
DRAWN	APPROVED	DATE	E-26145
	RHM	9-20-88	

VI. WIRING AND SCHEMATIC DIAGRAMS, PARTS LISTS

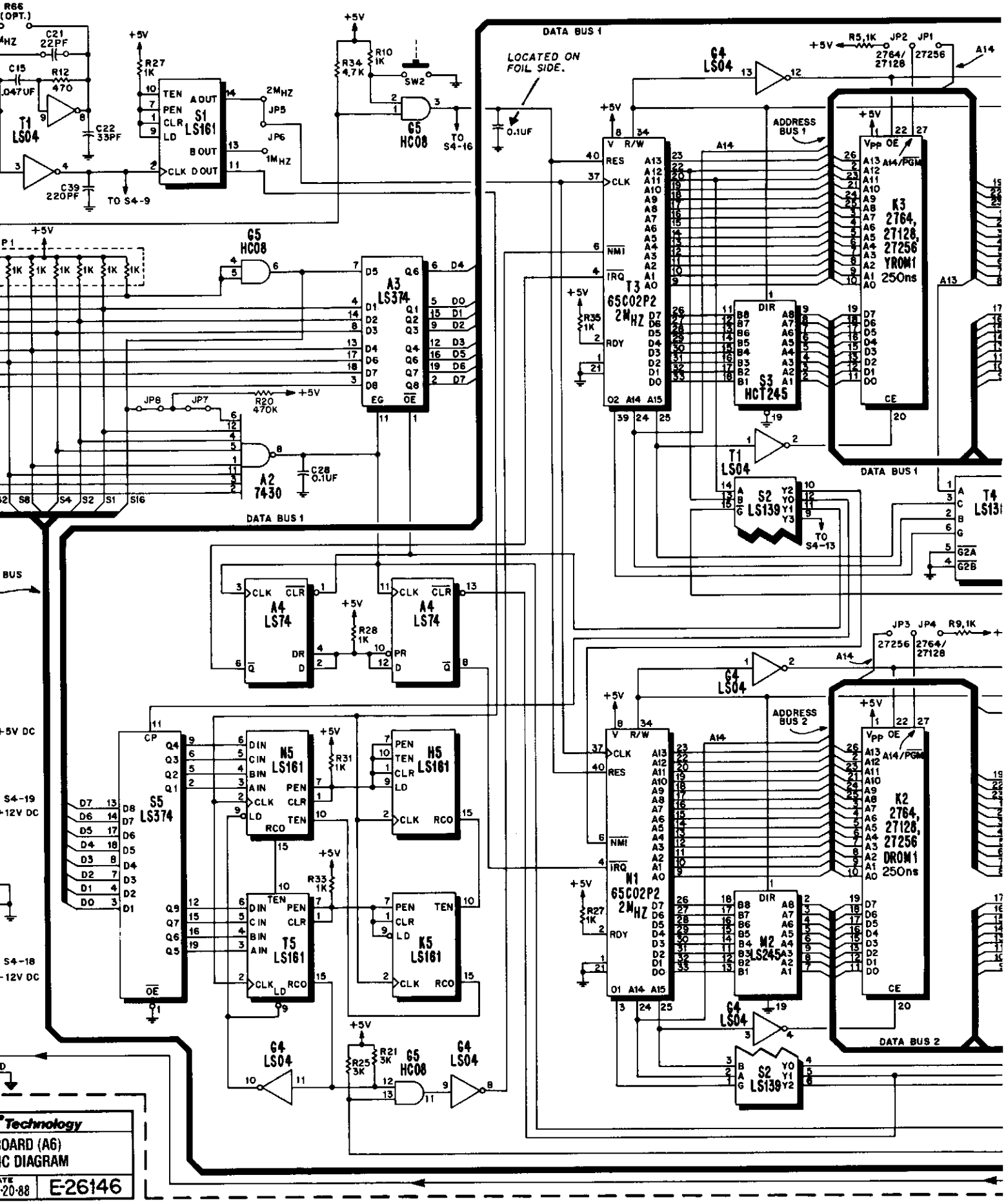
DATA BUS 1
LOCATED ON FOIL SIDE.
ADDRESS BUS 1
ADDRESS BUS 2
DATA BUS 2
T1 LS04
S1 LS161
G5 HC08
A3 LS374
A2 7430
T3 65C02P2 2MHZ
S3 HCT245
K3 2764, 27128, 27256 YROM1 250ns
S2 LS139
T4 LS13
A4 LS74
S5 LS374
N5 LS161
H5 LS161
T5 LS161
K5 LS161
N1 65C02P2 2MHZ
M2 LS245
K2 2764, 27128, 27256 DROM1 250ns
G4 LS04
Technology
OARD (A6)
C DIAGRAM
E-26146

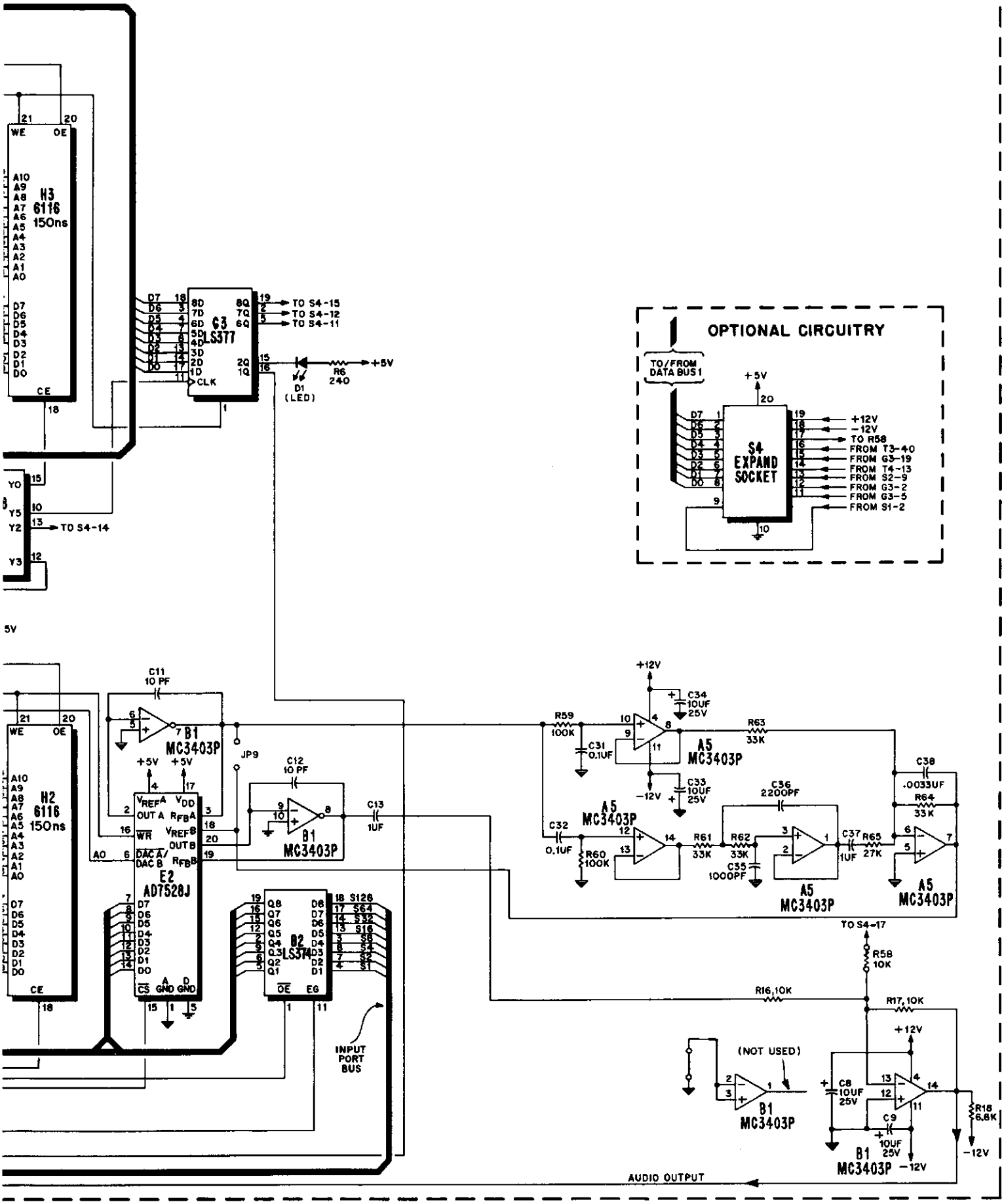
H3
6116
150ns
G3
LS377
TO S4-15
TO S4-12
TO S4-11
+5V
R6
240
D1
(LED)
TO S4-14
OPTIONAL CIRCUITRY
TO/FROM
DATA BUS 1
S4
EXPAND
SOCKET
+12V
-12V
TO R58
FROM T3-40
FROM G3-19
FROM T4-13
FROM S2-9
FROM G3-2
FROM G3-5
FROM S1-2
H2
6116
150ns
B1
MC3403P
C11
10 PF
C12
10 PF
JP9
C13
1UF
E2
AD7528J
B2
LS374
INPUT
PORT
BUS
A5
MC3403P
R59
100K
C31
0.1UF
C34
10UF
25V
C33
10UF
25V
R63
33K
C32
0.1UF
R60
100K
R61
33K
R62
33K
C35
1000PF
C36
2200PF
C37
1UF
R65
27K
C38
.0033UF
R64
33K
TO S4-17
R58
10K
R16,10K
R17,10K
(NOT USED)
C8
10UF
25V
C9
10UF
25V
R18
6.6K
AUDIO OUTPUT

VI. WIRING AND SCHEMATIC DIAGRAMS, PARTS LISTS

DISPLAY BOARD (A4) COMPONENT LOCATION

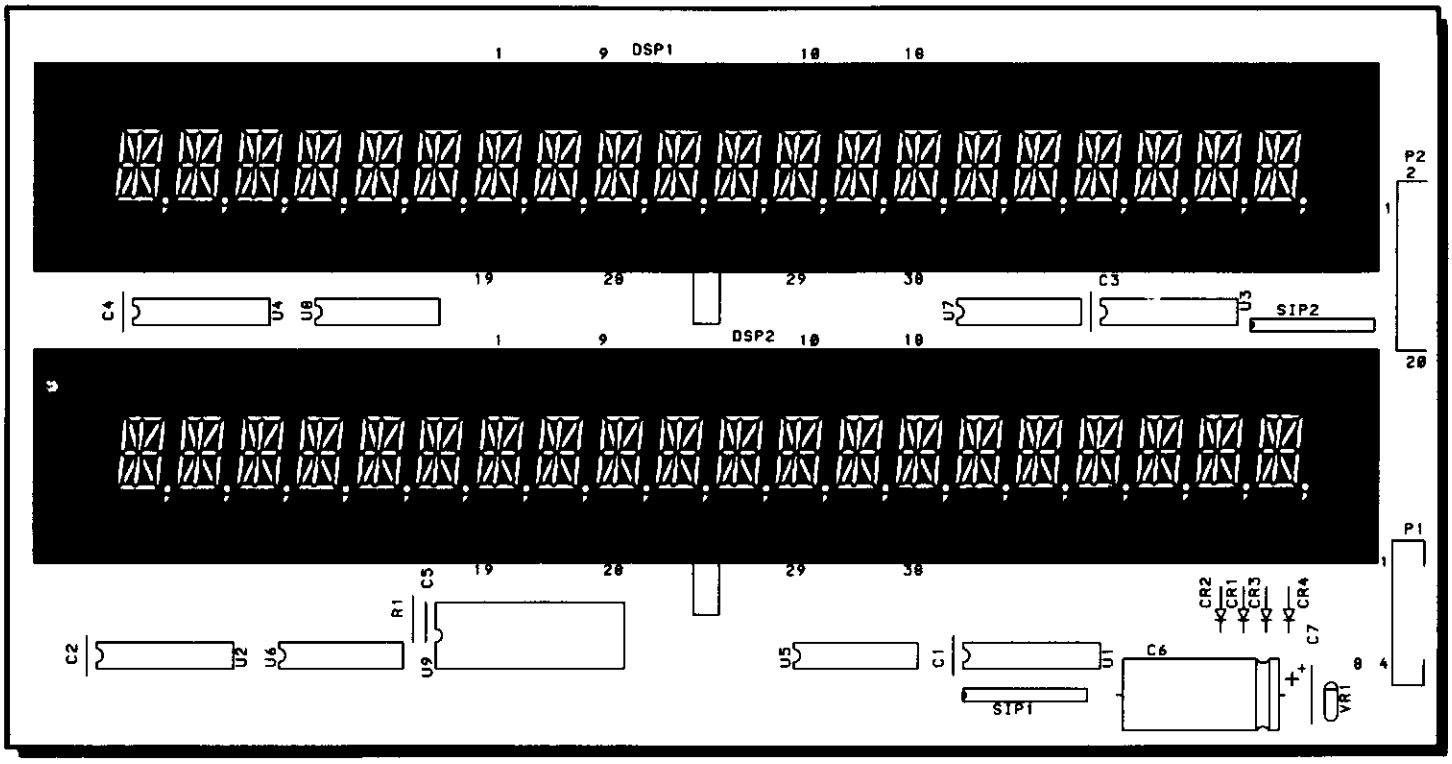

DISPLAY BOARD (A4) PARTS LIST

REFERENCE	DESCRIPTION	PART NUMBER
	Display Board Assembly (A4)	MA-1361
C1-C4	Capacitor,.01UF, +80%-20%, 50V	XO-229
C5	Capacitor, 0.1UF, +80%-20%, 50V	XO-230
C6	Capacitor 470UF, 50V	XO-847
C7	Capacitor, 10UF, 20%, 25V	XO-127
CR1-CR4	Diode, 1N4004	XO-254
DSP1, DSP2	Alphanumeric Display, FG2013B2	XO-901
R1	Resistor, 3K Ohm, 5%, 1/4W	XO-23
SIP1	Resistor Pack 4.7K Ohm X 8, 5%, 1/4W	XO-161
SIP2	Resistor Pack, 33K Ohm X 8, 5%, 1/4W	XO-945
U1-U4	IC, Octal "D" Flip-Flop, 74HC273	XO-949
U5-U8	IC, Display Drivers, 6118A2	XO-951
U9	IC, Latched Drivers, TL5812	XO-952
VR1	Diode 1N4739A, 9.1V Zener	XO-881
A4P1	Header, 8 Position	XO-920
A4P2	Header, 20 Position	XO-941
	Sponge Rubber, 1-1/4" (4)	24290A

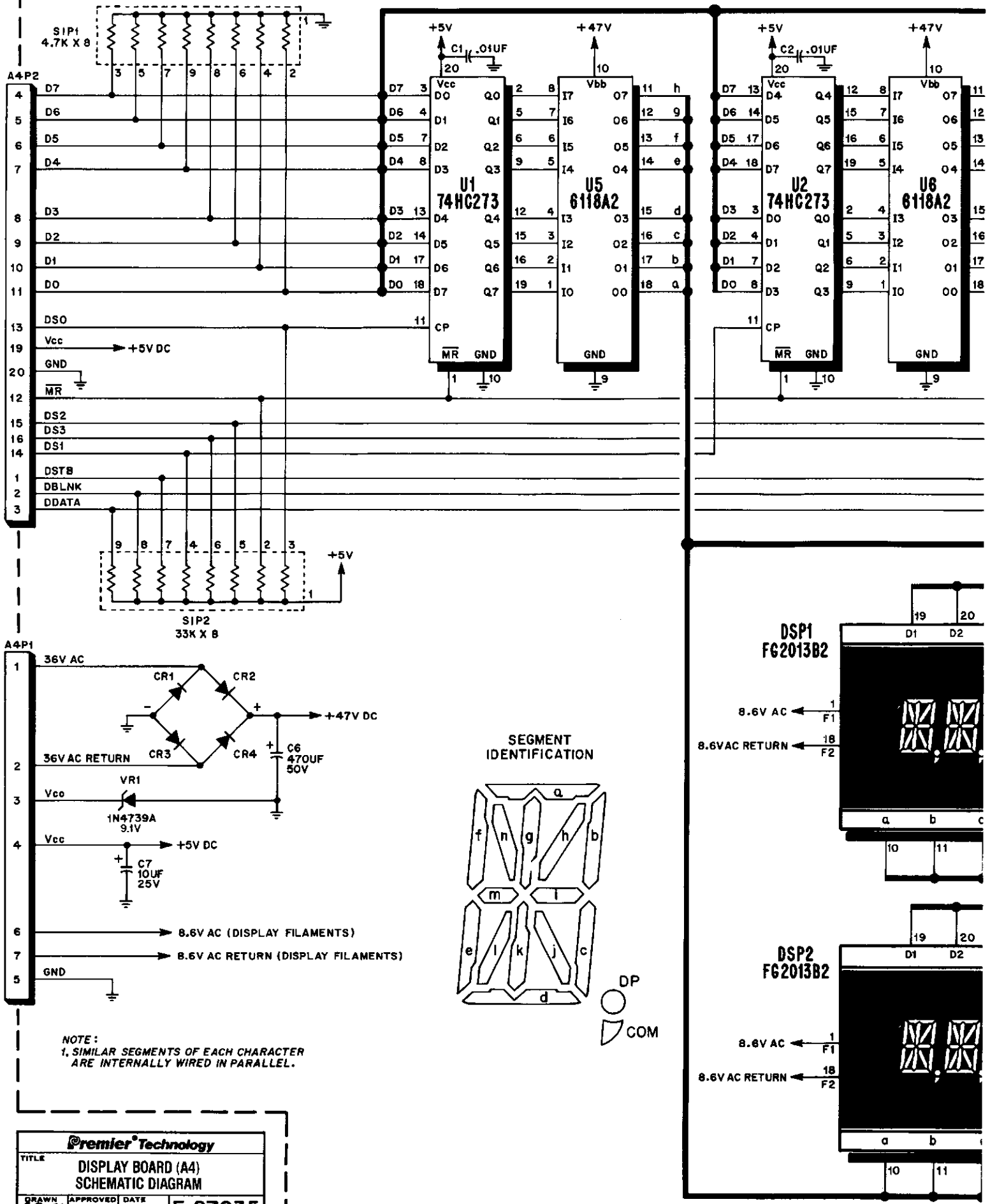

NOTE :
1. SIMILAR SEGMENTS OF EACH CHARACTER ARE INTERNALLY WIRED IN PARALLEL.

Premier® Technology			
TITLE: DISPLAY BOARD (A4) SCHEMATIC DIAGRAM			
DRAWN	APPROVED: RHM	DATE: 10-12-89	E-27035

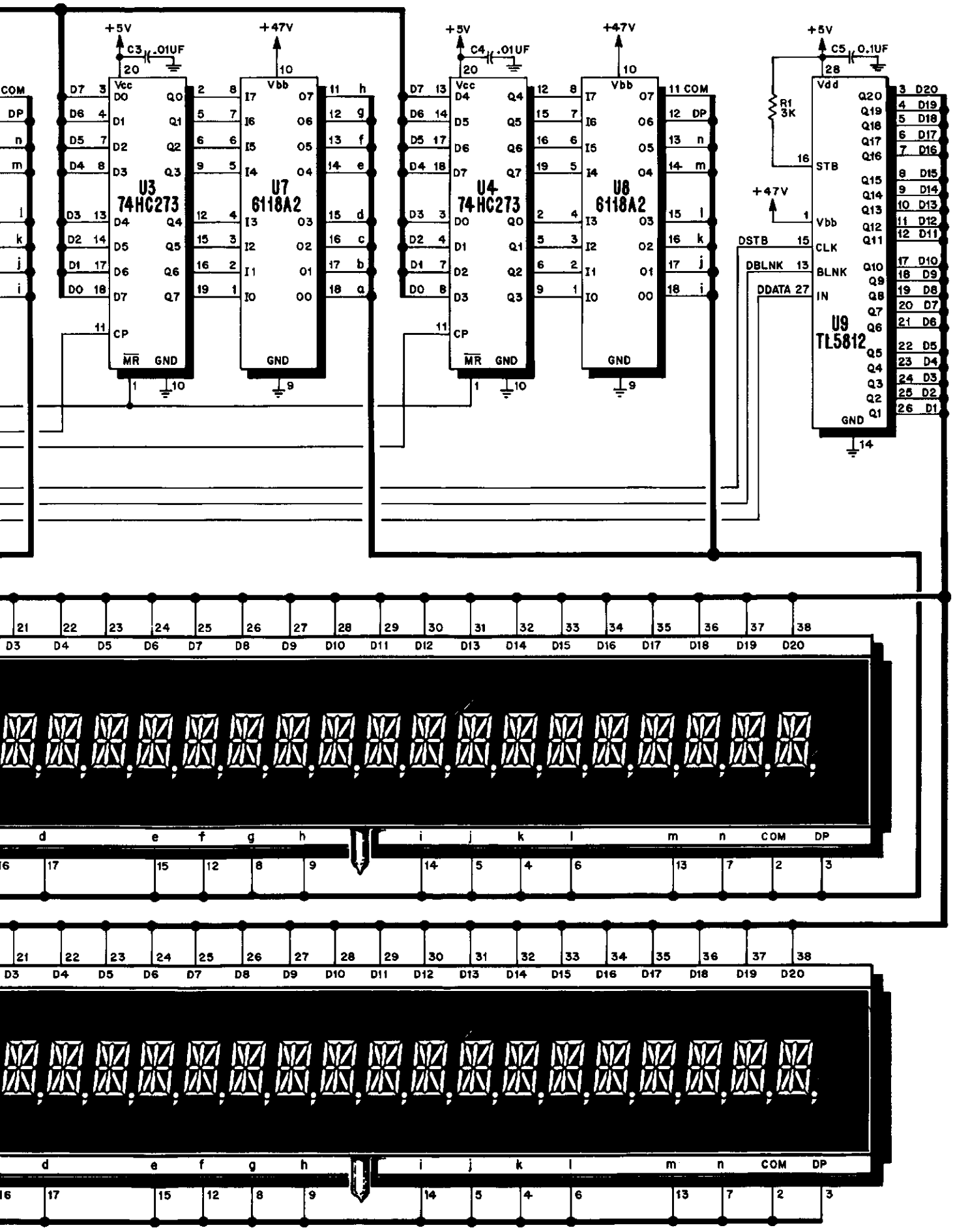
+5V
C3 .01UF
+47V
U3
74HC273
U7
6118A2
+5V
C4 .01UF
+47V
U4
74HC273
U8
6118A2
+5V
C5 0.1UF
R1
3K
+47V
U9
TL5812
DSTB
DBLNK
DDATA
COM
DP

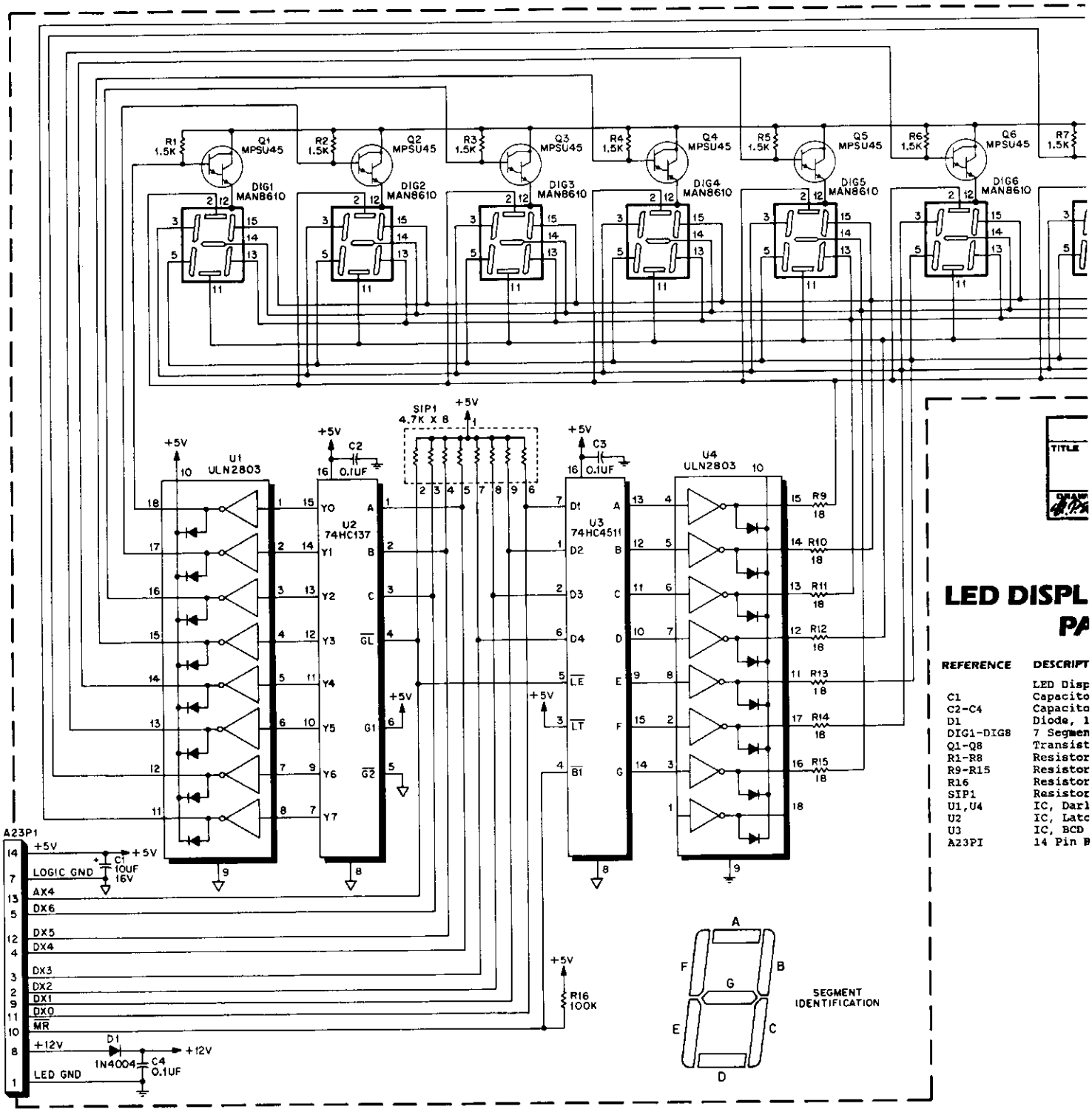

LED DISPL
PA

REFERENCE	DESCRIPT
	LED Disp
C1	Capacito
C2-C4	Capacito
D1	Diode, 1
DIG1-DIG8	7 Segmen
Q1-Q8	Transist
R1-R8	Resistor
R9-R15	Resistor
R16	Resistor
SIP1	Resistor
U1,U4	IC, Darl
U2	IC, Latc
U3	IC, BCD
A23PI	14 Pin H

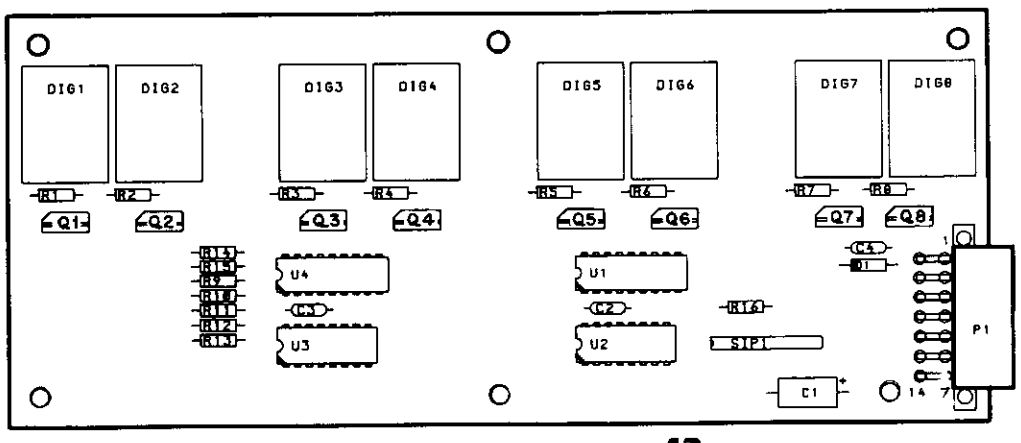

LED DISPLAY BOARD
COMPONENT LOCA

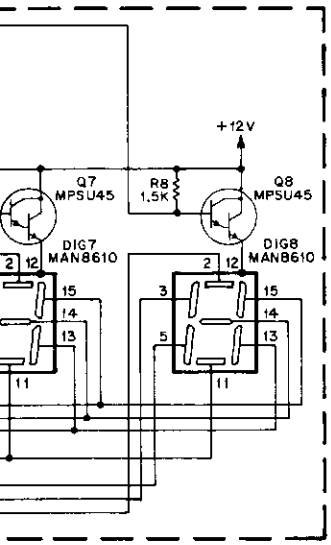

Premier Technology			
LED DISPLAY BOARD (A23) SCHEMATIC DIAGRAM			
	APPROVED RHM	DATE 1-8-90	E-27201

AY BOARD (A23)
RTS LIST

ON	PART NO.
ay Board Assembly (A23)	MA-1411
, 10UF, 16V	X0-846
, 0.1UF, 50V	X0-230
4004	X0-254
LED,MAN8610	X0-1007
r, NPN Darlington	X0-306
1.5K OHM, 5%, 1/4W	X0-20
18 OHM, 1%, 1/4W	X0-1003
100K OHM, 5%, 1/4W	X0-45
Pack, 4.7K OHM X 8	X0-161
ngton Driver, ULN2803	X0-1006
ed Driver, 74HC137	X0-1004
o 7 Segment	X0-1005
ader	X0-1008

(A23)
TION

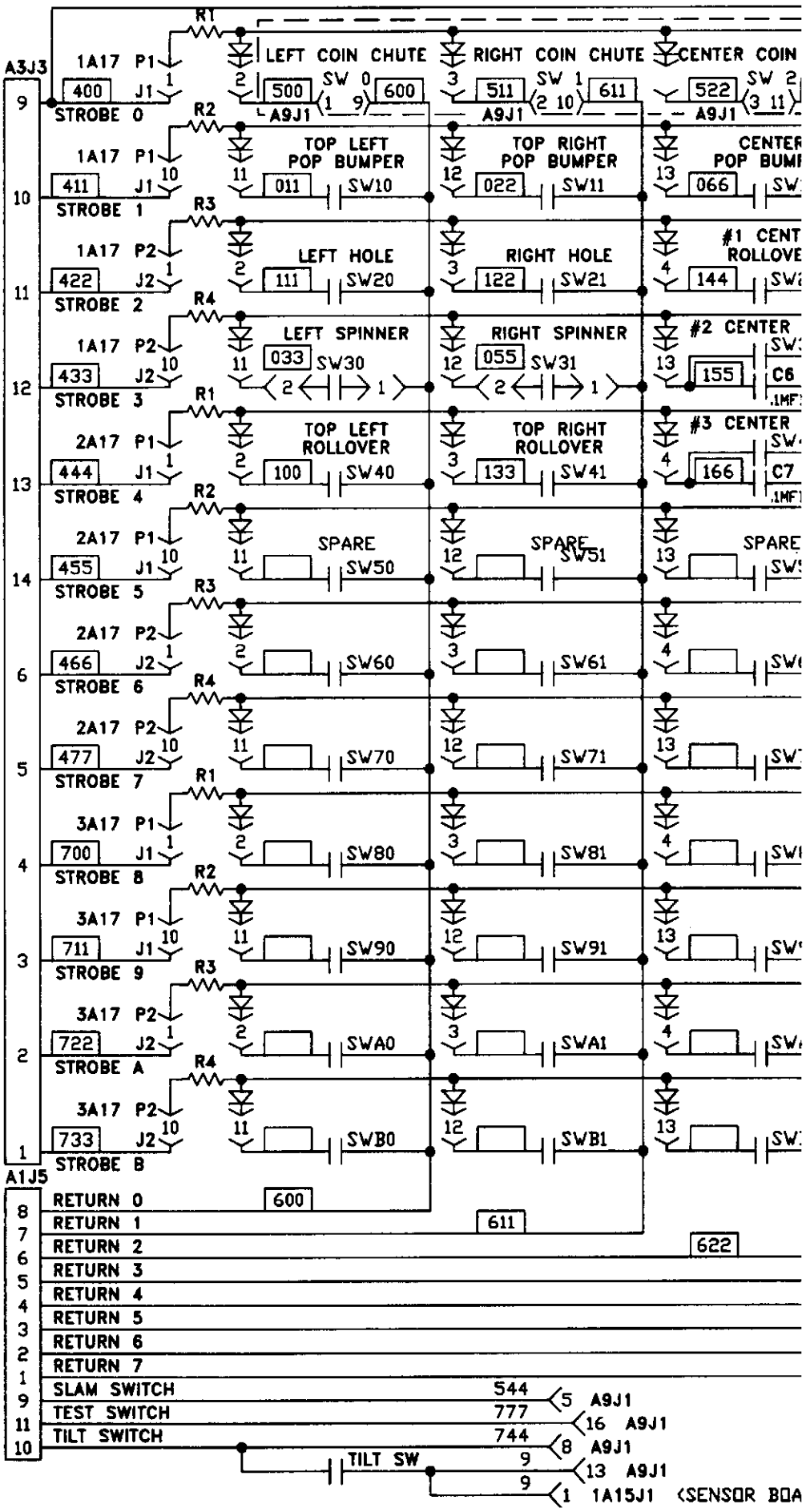

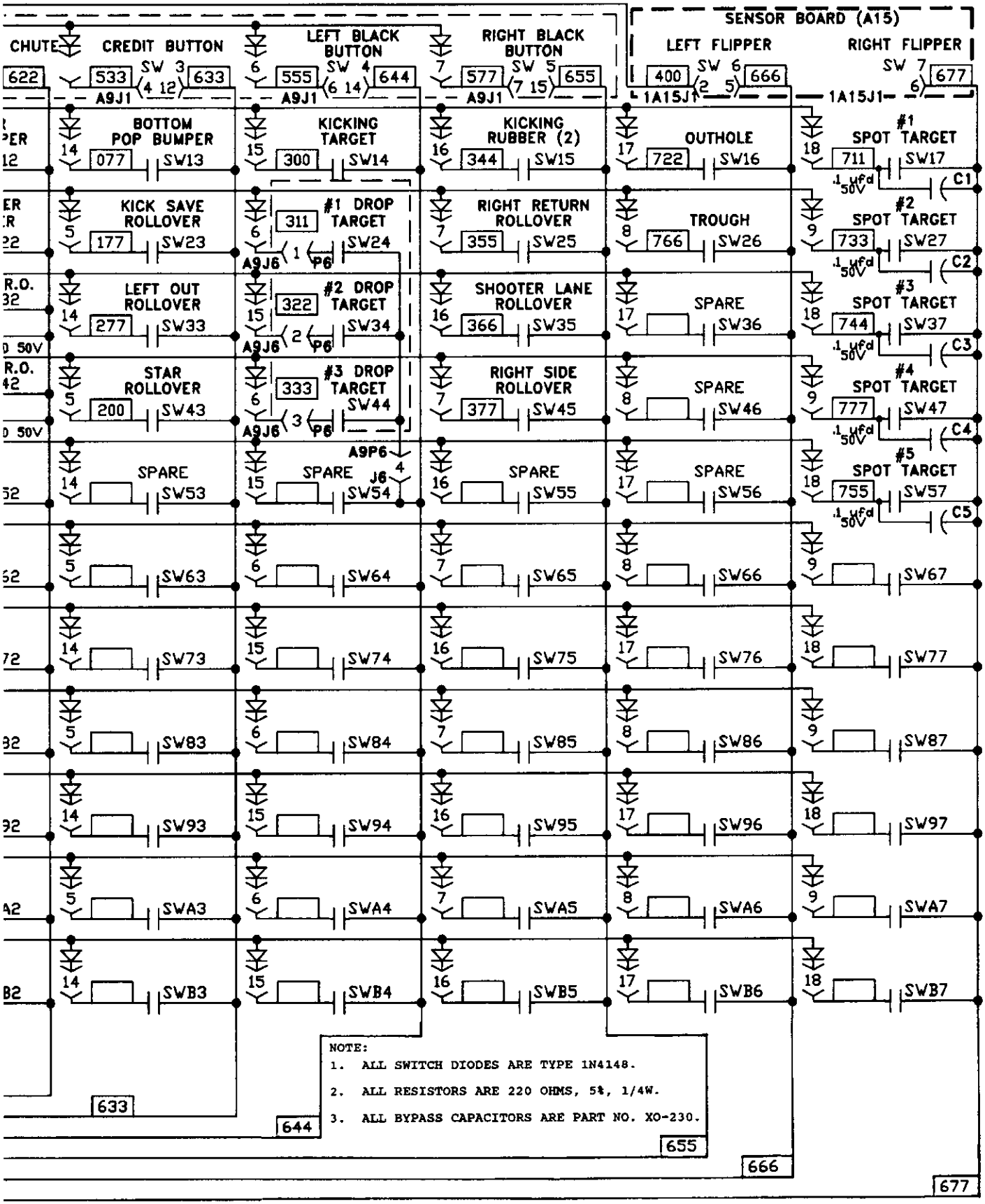

COLOR CODE					
0	BLACK	4	YELLOW	8	GRAY
1	BROWN	5	GREEN	9	WHITE
2	RED	6	BLUE		
3	ORANGE	7	VIOLET		

Premier Technology

TITLE: SWITCH MATRIX SCHEMATIC DIAGRAM

USED ON	DRAWN	DATE	
#724	RLM	05-22-90	C-27386

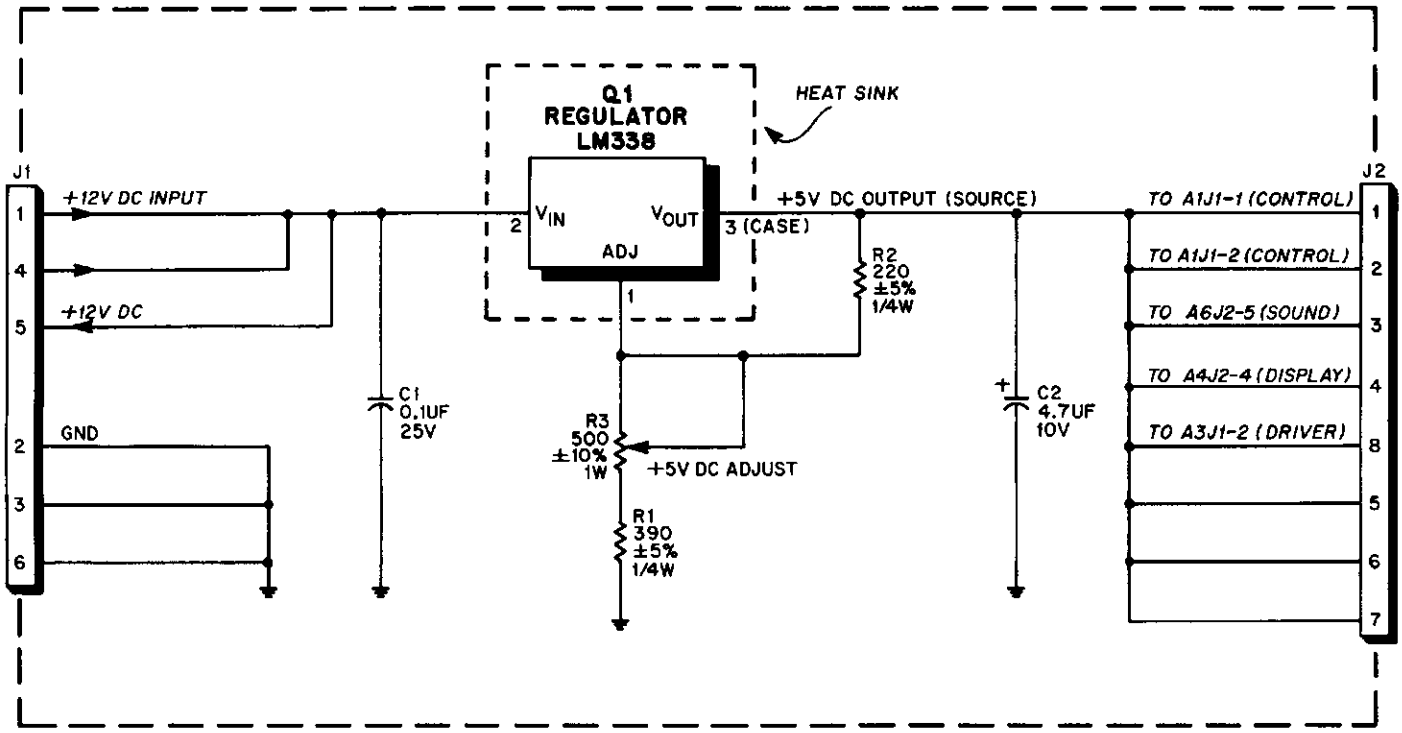

Premier Technology			
TITLE: POWER SUPPLY (A2) SCHEMATIC DIAGRAM			
DRAWN: A.P.B.	APPROVED: RHM	DATE: 12 FEB 85	E-24441

POWER SUPPLY (A2) COMPONENT LOCATION

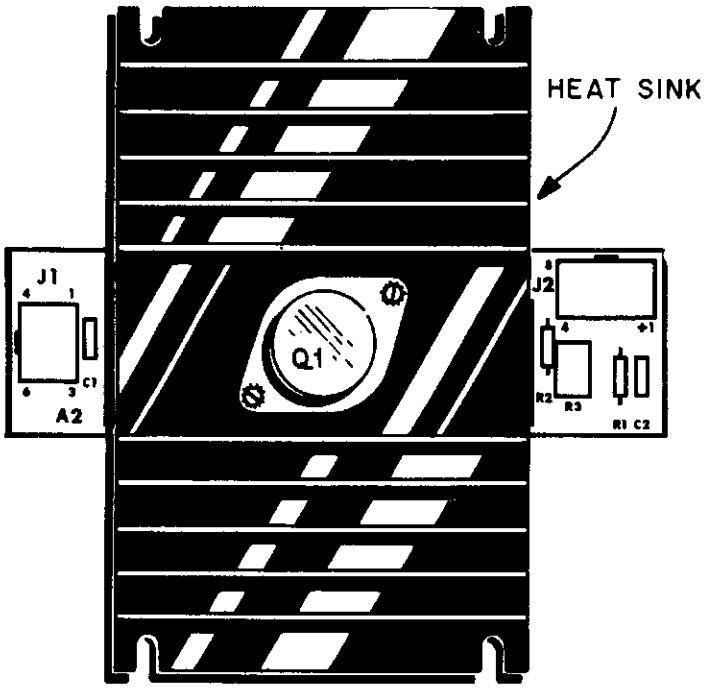

POWER SUPPLY (A2) PARTS LIST

REFERENCE	DESCRIPTION	PART NUMBER
	Power Supply (A2)	MA-1359
C1	Capacitor, 0.1UF, +80% -20%, 50V	XO-230
C2	Capacitor, 4.7UF, 10% 10V	XO-226
J1	Header, 6 Position	XO-910
J2	Header, 8 Position	XO-911
Q1	Regulator, LM338, (5 Amp)	XO-839
R1	Resistor, 390 Ohm, 5%, 1/4W	XO-845
R2	Resistor, 220 Ohm, 5%, 1/4W	XO-21
R3	Resistor, (Pot) 500 Ohm, 10%, 1W	XO-112
	Heat Sink	XO-534
	Insulator (Regulator)	XO-522
	Insulator (Regulator)	XO-523

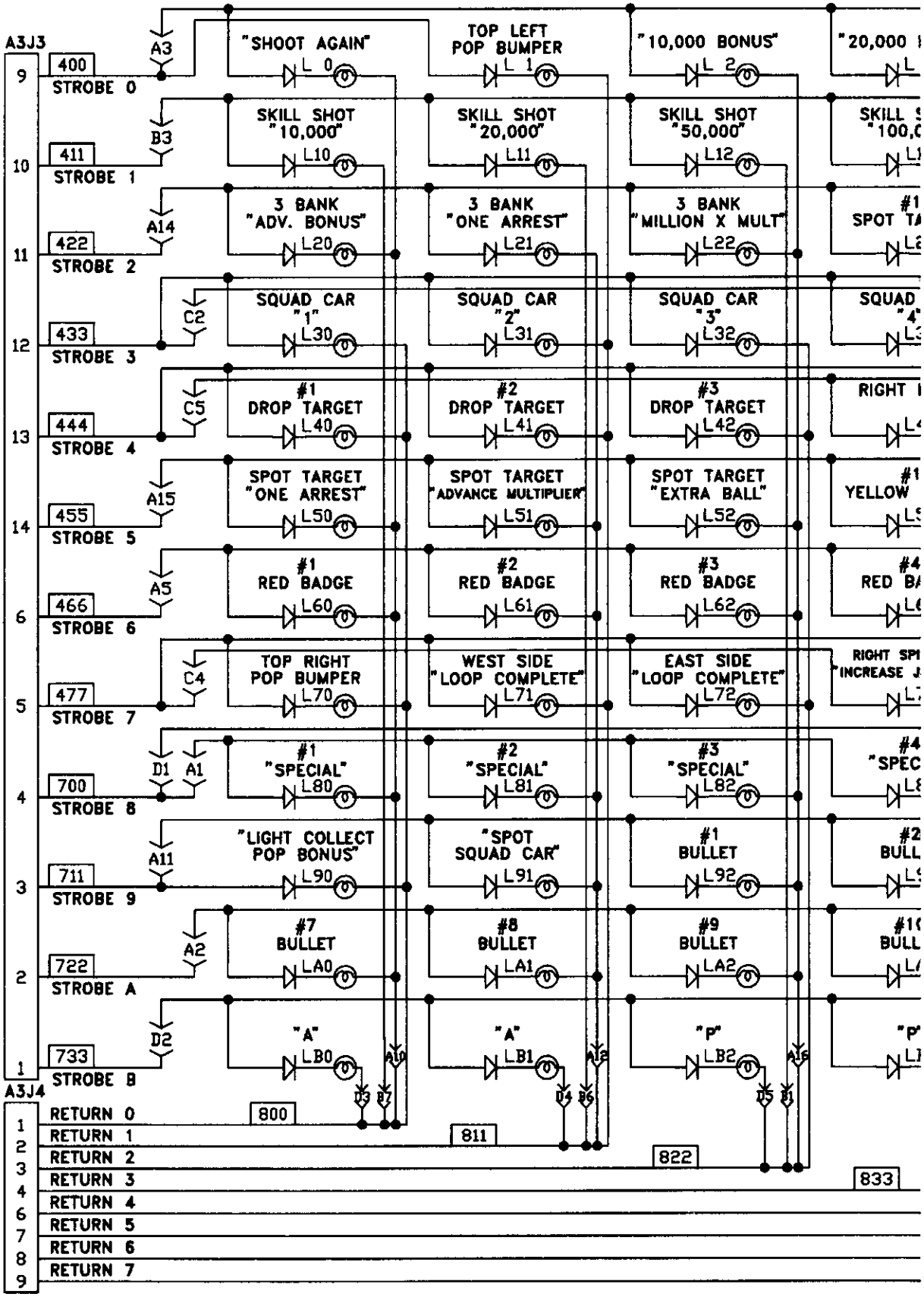

NOTE:

1. ALL LAMP DIODES ARE TYPE 1N4004.
2. ALL LAMPS ARE TYPE #44.
3. A = 1A22J1 (PRINTED CIRCUIT BOARD)
   B = 2A22J1 (PRINTED CIRCUIT BOARD)
   C = 3A22J1 (PRINTED CIRCUIT BOARD)
   D = A9J4/P4 (LIGHTBOX INSERT)

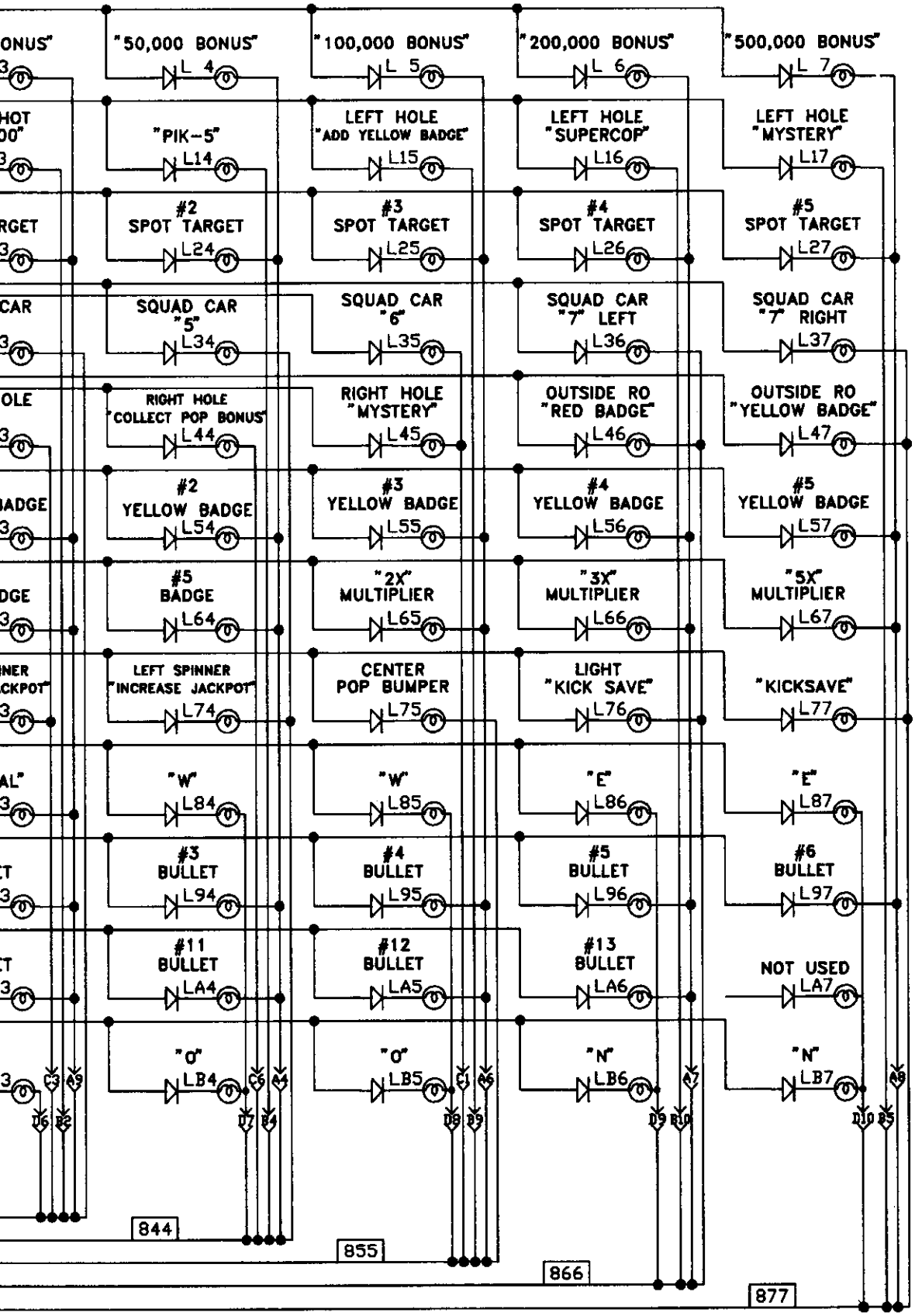

COLOR CODE					
0	BLACK	4	YELLOW	8	GRAY
1	BROWN	5	GREEN	9	WHITE
2	RED	6	BLUE		
3	ORANGE	7	VIOLET		

Premier Technology

TITLE			
LAMP MATRIX SCHEMATIC DIAGRAM			
USED IN	DRAWN	DATE	
#724	RLM	05-22-90	C-27387

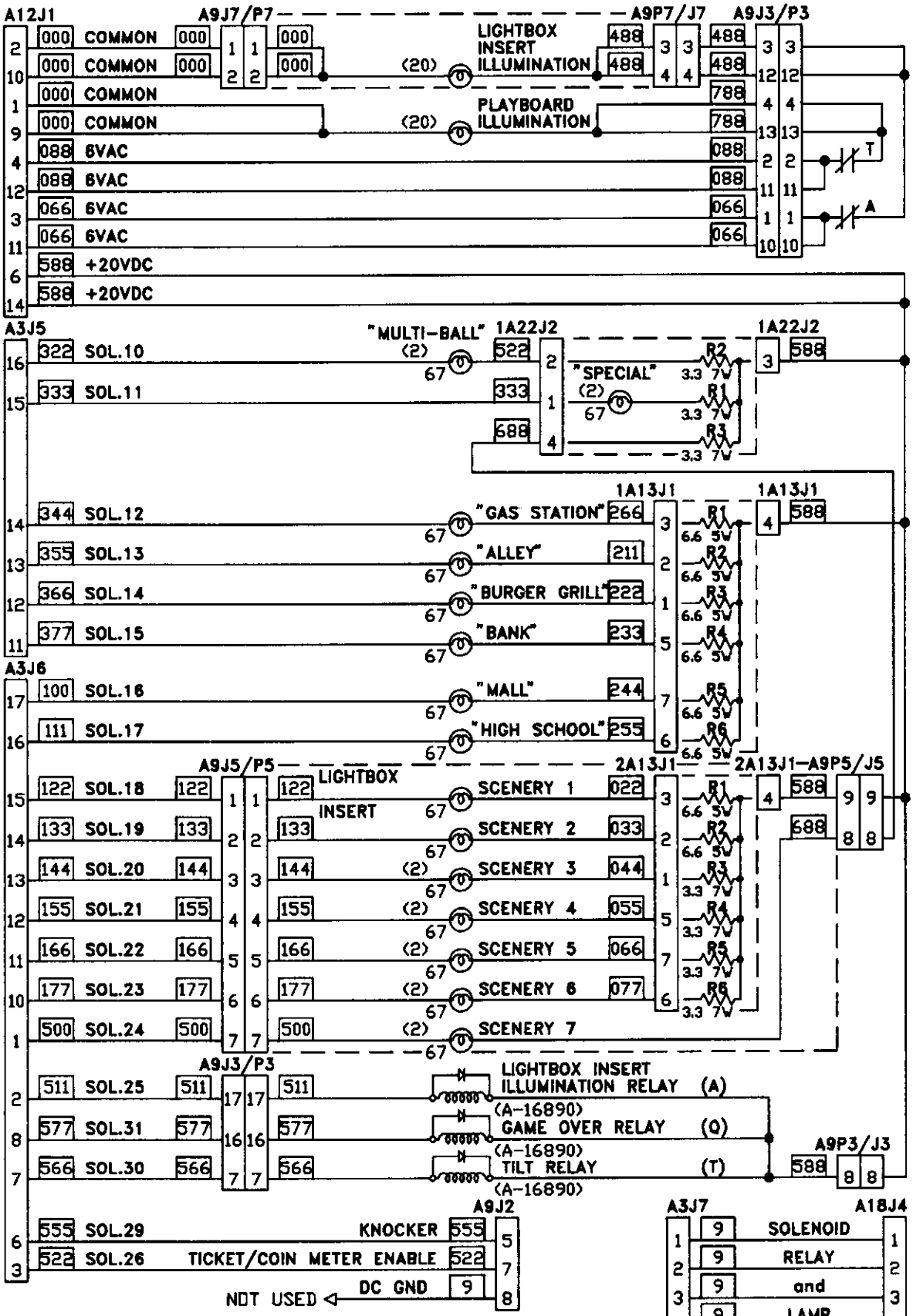

COLOR CODE					
0	BLACK	4	YELLOW	8	GRAY
1	BROWN	5	GREEN	9	WHITE
2	RED	6	BLUE		
3	ORANGE	7	VIOLET		

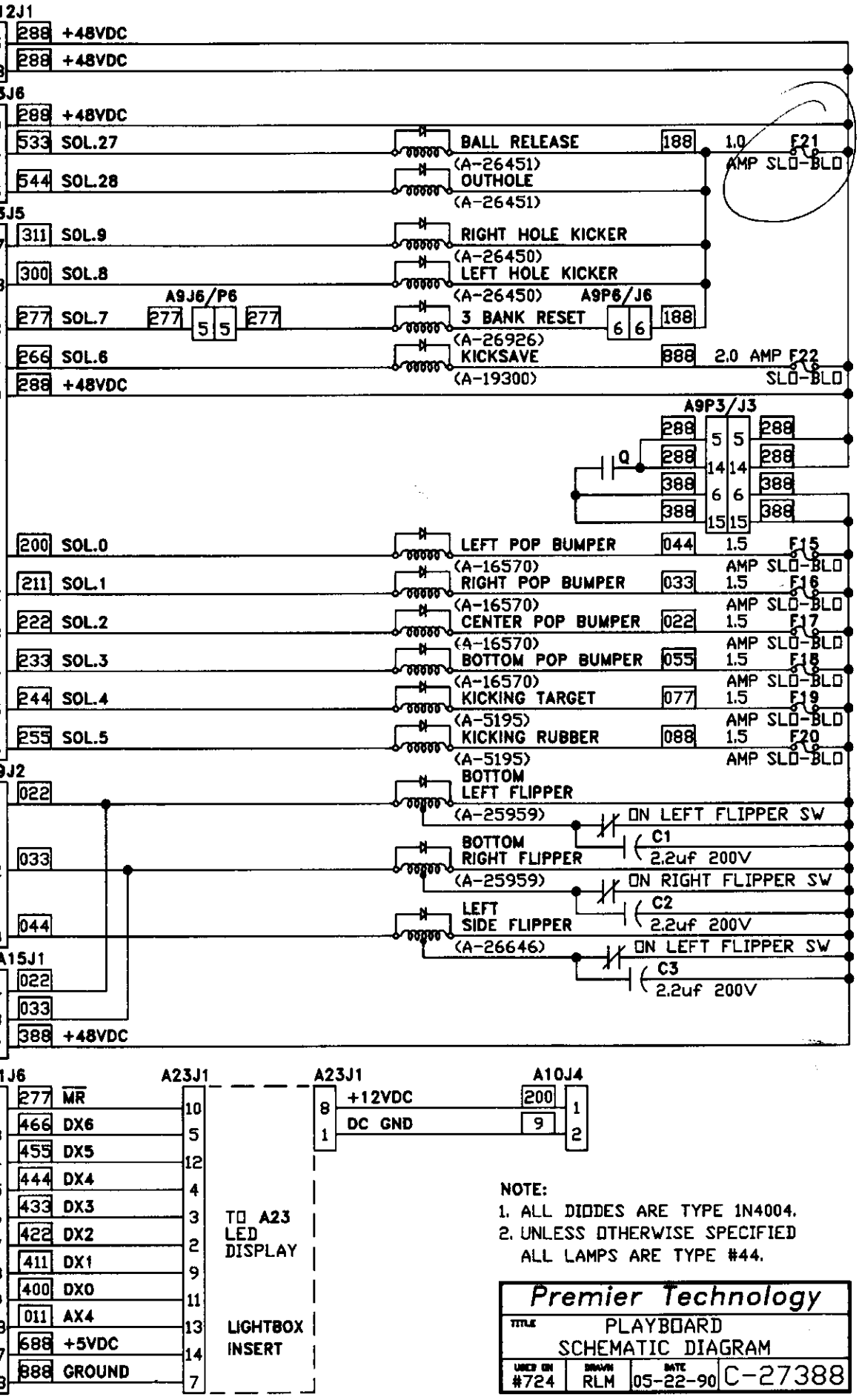

NOTE:
1. ALL DIODES ARE TYPE 1N4004.
2. UNLESS OTHERWISE SPECIFIED ALL LAMPS ARE TYPE #44.

Premier Technology			
TITLE: PLAYBOARD SCHEMATIC DIAGRAM			
USED ON #724	DRAWN RLM	DATE 05-22-90	C-27388

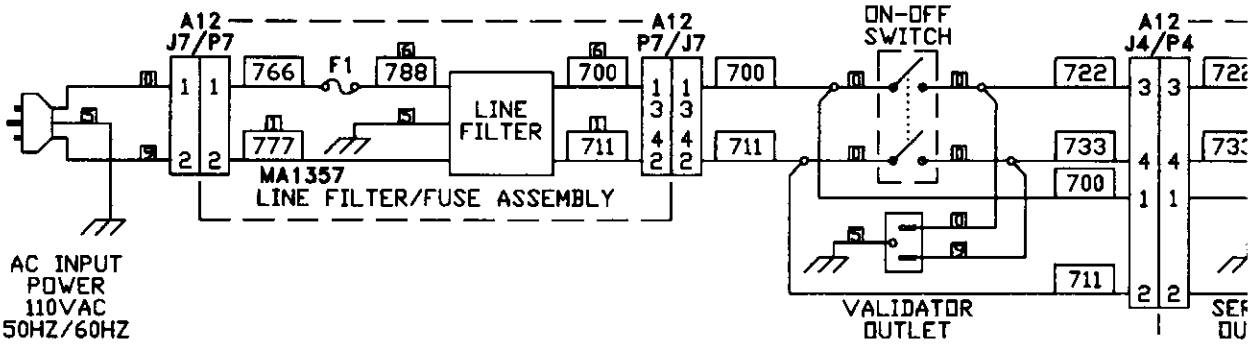

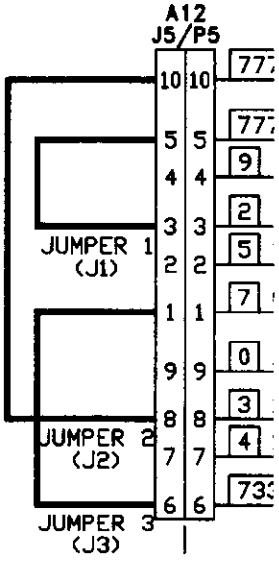

A12J5 WIRING VIEW PIN NUMBERS

10	9	8	7	6
5	4	3	2	1

100VAC INPUT JUMPERS

J2	9	8	J2	J3	JUMPER WIRE COLORS 111
J1	4	3	J1	J3	

110VAC INPUT JUMPERS

J2	9	J2	7	J3	JUMPER WIRE COLORS 222
J1	4	J1	2	J3	

120VAC INPUT JUMPERS

J2	J2	8	7	J3	JUMPER WIRE COLORS 333
J1	J1	3	2	J3	

200VAC INPUT JUMPERS

10	9	8	J2	6	JUMPER WIRE COLORS 444
J1	4	3	J1	J2	

220VAC INPUT JUMPERS

10	9	J2	7	6	JUMPER WIRE COLORS 555
J1	4	J1	2	J2	

240VAC INPUT JUMPERS

10	J2	8	7	6	JUMPER WIRE COLORS 666
J1	J1	3	2	J2	

NOTES:
1. XXX INDICATES WIRE COLOR.
2. A12J5 SHOWN IN 110VAC OPERATION.
3. ⏚ CIRCUIT GROUND ⏚ EARTH GROUND

COLOR CODE			
0	BLACK	5	GREEN
1	BROWN	6	BLUE
2	RED	7	VIOLET
3	ORANGE	8	GRAY
4	YELLOW	9	WHITE

FUSE DESIGNATIONS TABLE

FUSE	RATING	PART NO.	USAGE	
F1	8.0A SLO-BLO	EL26	LINE INPUT	110VAC
	4.0A SLO-BLO	EL33	LINE INPUT	220VAC
F2	5.0A SLO-BLO	EL8	PRIMARY POWER	110VAC
	2.5A SLO-BLO	EL21	PRIMARY POWER	220VAC
F3	1/2A	EL28	DISPLAY FILAMENT	8.8VAC
F4	1/2A	EL28	DISPLAY FILAMENT	8.8VAC
F5	1/4A SLO-BLO	EL5	DISPLAYS	35VAC
F6	4.0A SLO-BLO	EL33	POWER SUPPLY	10VAC
F7	10.0A SLO-BLO	EL36	CONTROLLED LAMPS	16VAC
F8	8.0A SLO-BLO	EL26	SOLENOIDS	51VAC
F9	6.25A SLO-BLO	EL29	PLAYFIELD ILLUMINATION	6VAC
F10	6.25A SLO-BLO	EL29	LIGHTBOX INSERT ILLUMINATION	6VAC
F11	1/2A SLO-BLO	EL20	AUXILLIARY POWER SUPPLY	12.5VAC

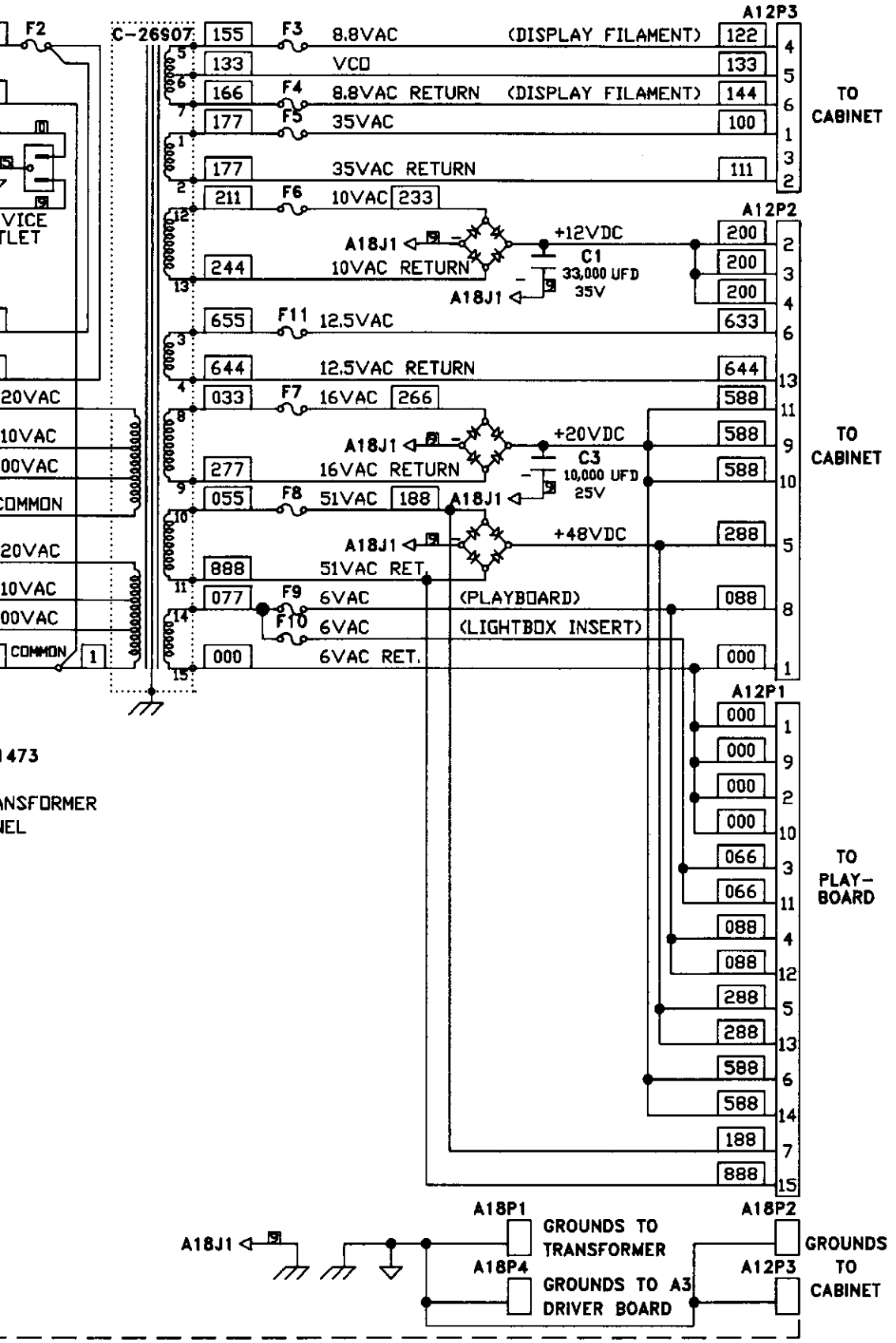

Premier Technology			
TITLE TRANSFORMER PANEL SCHEMATIC DIAGRAM			
USED ON #724	DRAWN RLM	DATE 06-27-90	27570

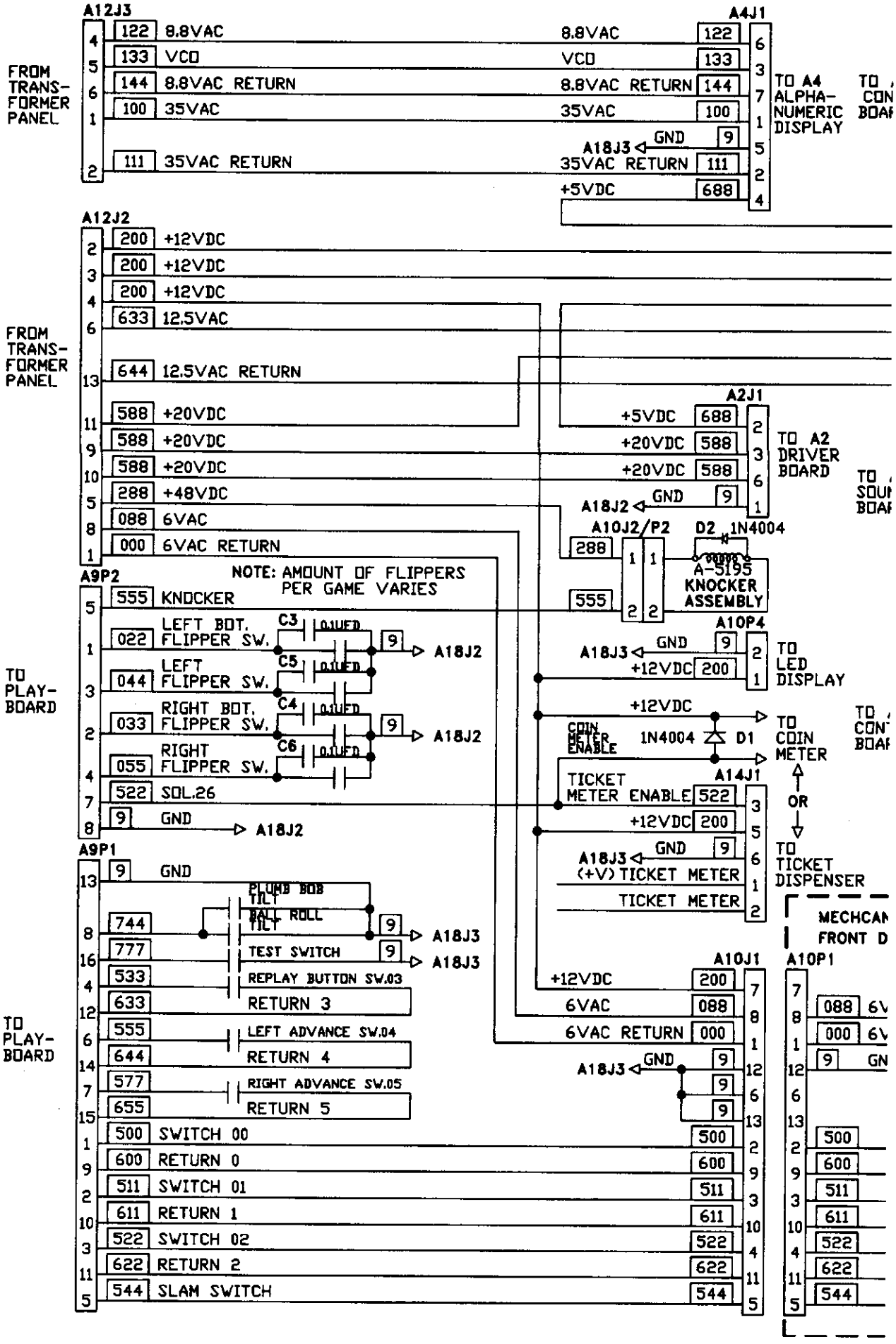
A12J3
FROM TRANS-FORMER PANEL
122 8.8VAC
133 VCO
144 8.8VAC RETURN
100 35VAC
111 35VAC RETURN
A4J1
8.8VAC 122
VCO 133
8.8VAC RETURN 144
35VAC 100
GND 9
A18J3
35VAC RETURN 111
+5VDC 688
TO A4 ALPHA-NUMERIC DISPLAY
A12J2
FROM TRANS-FORMER PANEL
200 +12VDC
200 +12VDC
200 +12VDC
633 12.5VAC
644 12.5VAC RETURN
588 +20VDC
588 +20VDC
588 +20VDC
288 +48VDC
088 6VAC
000 6VAC RETURN
A2J1
+5VDC 688
+20VDC 588
+20VDC 588
GND 9
A18J2
TO A2 DRIVER BOARD
A10J2/P2
288
555
D2 1N4004
A-5195 KNOCKER ASSEMBLY
A9P2
NOTE: AMOUNT OF FLIPPERS PER GAME VARIES
555 KNOCKER
022 LEFT BOT. FLIPPER SW.
044 LEFT FLIPPER SW.
033 RIGHT BOT. FLIPPER SW.
055 RIGHT FLIPPER SW.
C3 0.1UFD
C5 0.1UFD
C4 0.1UFD
C6 0.1UFD
522 SOL.26
9 GND
A18J2
TO PLAY-BOARD
A10P4
GND 9
+12VDC 200
TO LED DISPLAY
+12VDC
COIN METER ENABLE
1N4004 D1
TO COIN METER
OR
TO TICKET DISPENSER
A14J1
TICKET METER ENABLE 522
+12VDC 200
GND 9
A18J3
(+V) TICKET METER
TICKET METER
A9P1
9 GND
744 PLUMB BOB TILT / BALL ROLL TILT
777 TEST SWITCH
533 REPLAY BUTTON SW.03
633 RETURN 3
555 LEFT ADVANCE SW.04
644 RETURN 4
577 RIGHT ADVANCE SW.05
655 RETURN 5
500 SWITCH 00
600 RETURN 0
511 SWITCH 01
611 RETURN 1
522 SWITCH 02
622 RETURN 2
544 SLAM SWITCH
A18J3
A10J1
+12VDC 200
6VAC 088
6VAC RETURN 000
GND 9
A10P1
MECHCAN FRONT D

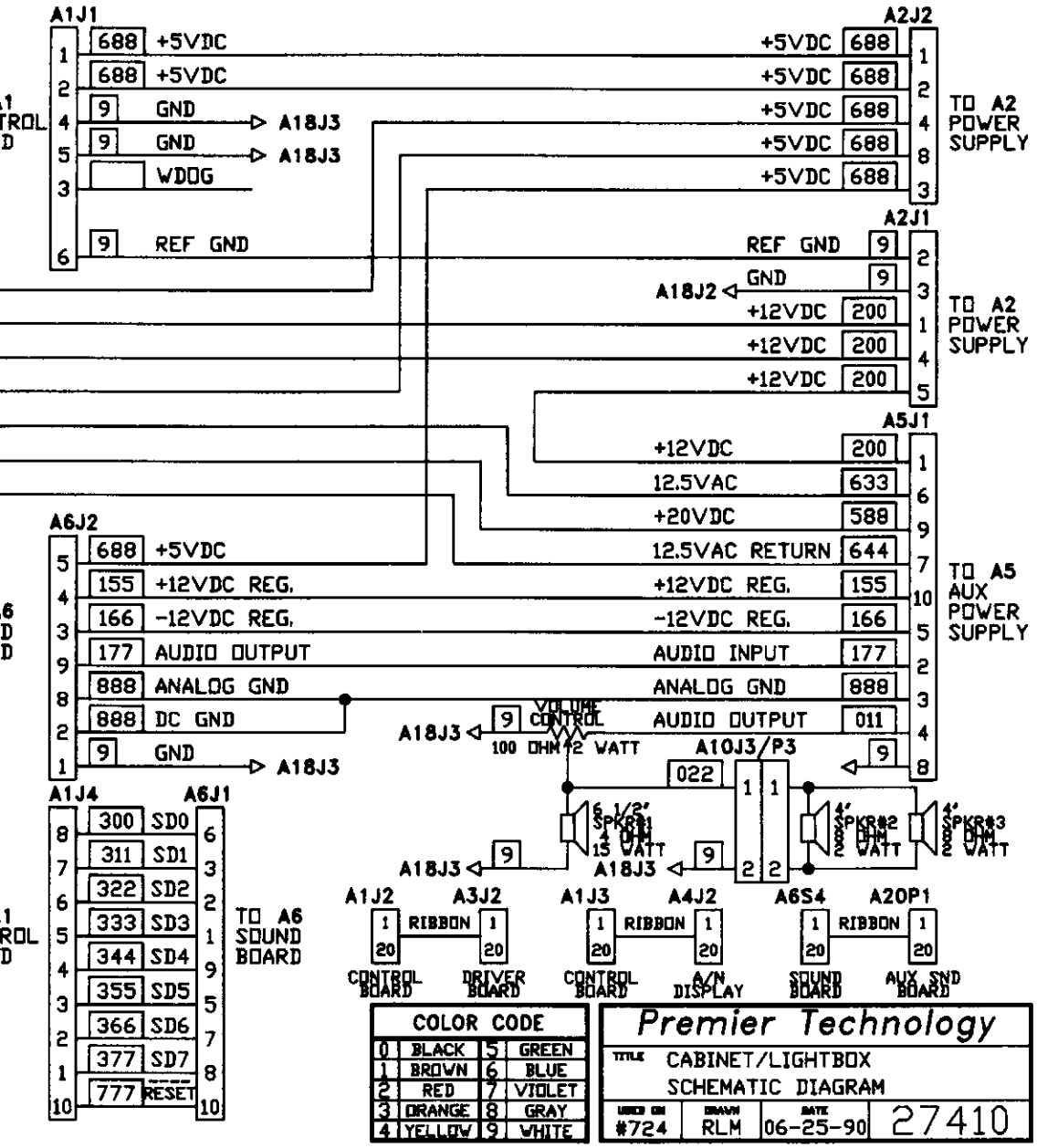

COLOR CODE			
0	BLACK	5	GREEN
1	BROWN	6	BLUE
2	RED	7	VIOLET
3	ORANGE	8	GRAY
4	YELLOW	9	WHITE

Premier Technology

TITLE: CABINET/LIGHTBOX SCHEMATIC DIAGRAM

USED ON	DRAWN	DATE	
#724	RLM	06-25-90	27410

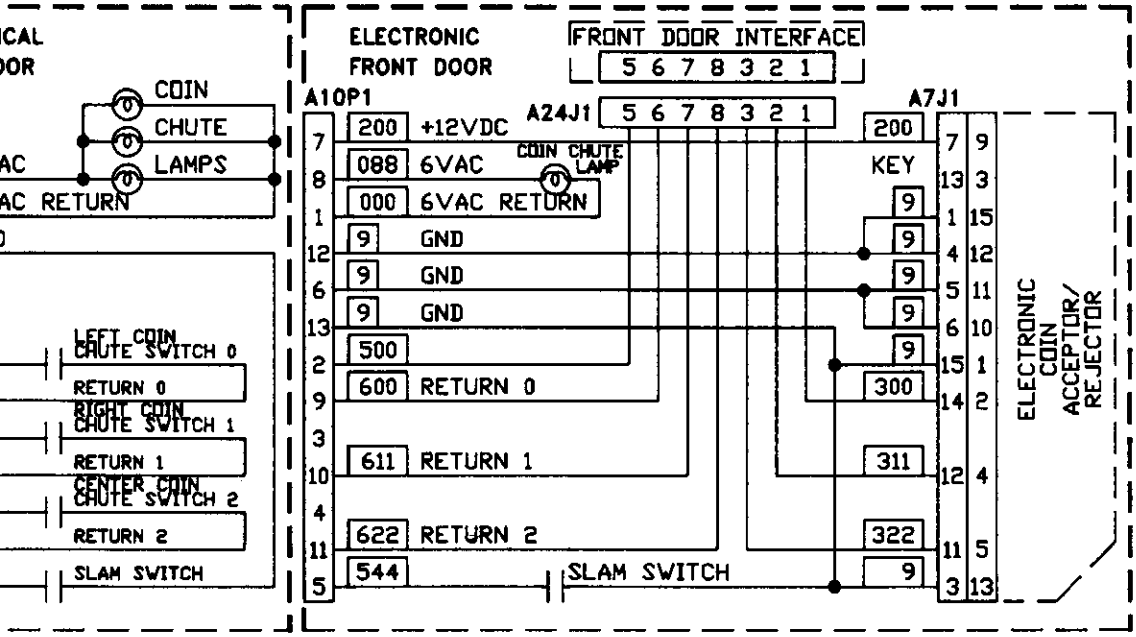

VII. PARTS INFORMATION

TABLE OF CONTENTS

PAGE

CABINET PARTS.....56

PLAYBOARD PARTS (SWITCHES).....57

PLAYBOARD PARTS (LAMPS).....58

PLAYBOARD PARTS
(RUBBER RINGS AND MISCELLANEOUS PARTS).....59

KICK SAVE PARTS
EXPLODED VIEW.....60

DROP TARGET PARTS
EXPLODED VIEW.....61

FLIPPER PARTS
EXPLODED VIEW.....62

BALL HOLE KICKER PARTS
EXPLODED VIEW.....63

KICKING TARGET
EXPLODED VIEW.....64

LIGHTBOX INSERT
LAMP IDENTIFICATION.....65

UNIQUE PARTS.....66

VII. PARTS INFORMATION

CABINET PARTS

ITEM	DESCRIPTION	PART NO.
1.	Cabinet	27115-724
2.	Lightbox Mounting Thumb Screw (2) (Not Shown, For Reference Only, Part of Lightbox Assembly)	FA-162
3.	Butt Hinge (2) (Attached to Lightbox)	26449
4.	"U" Bolt (P/O Lightbox)	24659
	Latch Assembly (P/O Cabinet)	21969
5.	Cable Assembly, Domestic (High Voltage)	MA-1419
6.	Line Cord (Domestic)	23365
	Line Cord Cover Plate	23364
7.	Speaker, 4 Ohm, 15W, 6-1/2"	EL-83
	Speaker Guard	20931
8.	Prop Stick, Playfield	23940
9.	Right Flipper Switch	26423
9A.	Left Flipper Switch	26054
10.	Ball Shooter Assembly	26314
11.	Switch, On/Off	13799
	Switch Plate (2)	18769
	Switch Housing	15163
12.	Front Door Assembly (Universal)	24159
	Cable Assembly	MA-1347
	Slam Switch (N/O)	26130
	6V DC Lamp, Wedge Base	FD-2
	Frame, Door	FD-13
	Two Chute Door	24159
	Black Button Bezel	FD-14
	Entry/Reject Button	FD-15
	Button Spring	FD-16
	Reject Flap	FD-17
	Clamp, Frame	FD-18
	Flat Lock and Cam Assembly	FD-19
	Base Plate with Pivot and Stud	FD-20
	Microswitch Bracket	FD-21
	Clear Plastic Cover for Microswitch	FD-22
	Coin Microswitch with Wire	FD-23
	Lampholder	FD-24
	Black Reject Bezel	FD-26
13.	Replay Switch Assembly	18092
14.	Cashbox	25309
	Cover	25315
	Liner (Small) (3)	24870
	Liner (Large) (2)	24871
15.	Plumb Bob Tilt Switch Assembly	
	Strike Plate	358
	Carbon, Tilt Bob	MH-30
	Rod, Tilt	357
	Bracket	22043
	Clip	14653
16.	Knocker Assembly	MA-12
17.	Cabinet Leg (4)	26684
	Leg Bolt (8)	3775
	3" Leg Adjuster (4)	MH-21
	3/8-16", Jam Nut (8)	FA-665
18.	Transformer Panel Assembly	MA-1473
	Bridge Rectifier (3)	EL-42
	Cable Assembly (Secondary)	MA-1348
	Capacitor, 10,000UF, 25V	XO-830
	Capacitor, 33,000UF, 35V	XO-957
	Fuse Block (8 Pos.)	EL-10
	Fuse Cover	23805
	Fuse Holder and Cap (F2)	EL-78
	Fuse Holder (1 Pos.)	EL-17
	F2, 5 Amp, SLO-BLO (110V AC)	EL-8
	F2, 2.5 Amp, SLO-BLO (220V AC)	EL-21
	F3, 1/2 Amp	EL-28
	F4, 1/2 Amp	EL-28
	F5, 1/4 Amp, SLO-BLO	EL-5
	F6, 4 Amp, SLO-BLO	EL-33
	F7, 10 Amp, SLO-BLO	EL-36
	F8, 8 Amp, SLO-BLO	EL-26
	F9, 6-1/4 Amp SLO-BLO	EL-29
	F10, 6-1/4 Amp, SLO-BLO	EL-29
	F11, 1/2 Amp	EL-28
	Ground Bus Assembly	27153
	Outlet, Service	18133
	Transformer	26907
19.	Cabinet Pivot Bracket (Right)	25658
	Cabinet Pivot Bracket (Left)	25657
20.	Line Filter Assembly	MA-1386
	Fuse Holder	EL-78
	F1, 8 Amp, SLO-BLO (110V AC)	EL-26
	F1, 4 Amp, SLO-BLO (220V AC)	EL-33
	Line Filter	EL-50
	Line Filter (Germany)	EL-51
21.	Mounting Bracket	24149
	Control, Volume, 100 Ohm, 2W	XO-199
	Switch, PLAY/TEST	EL-57

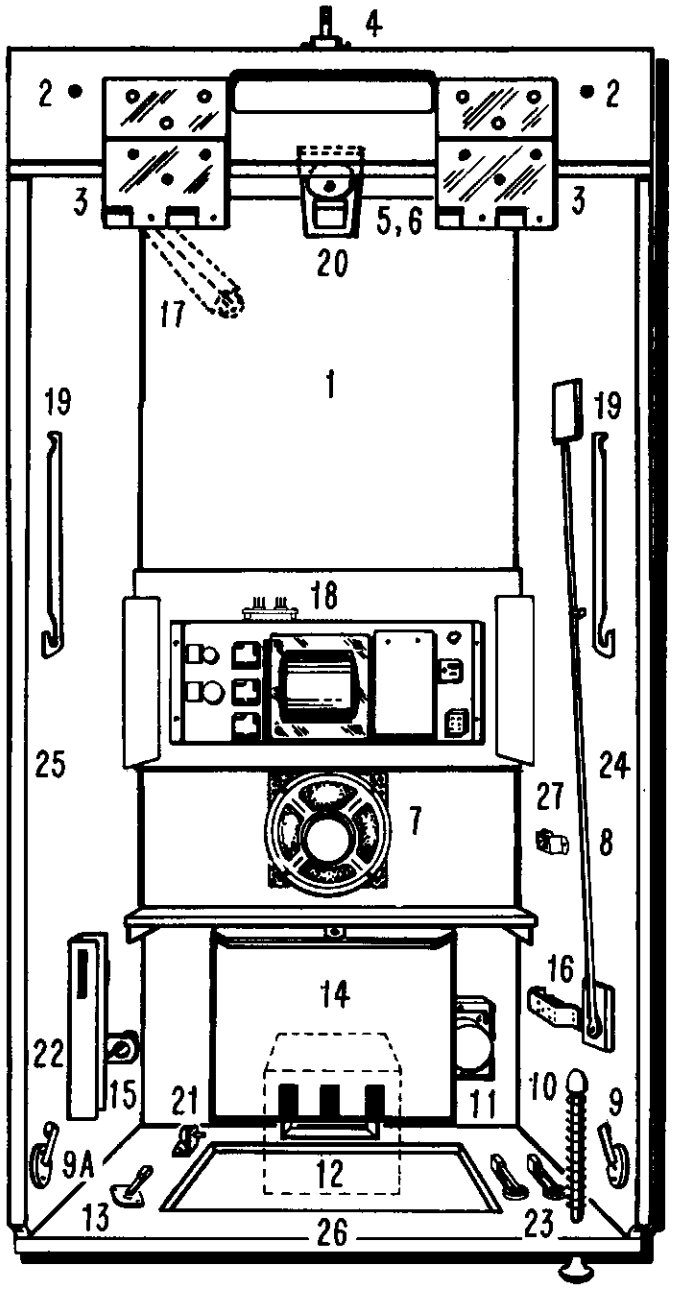

ITEM	DESCRIPTION	PART NO.
22.	Ball Roll Tilt	
	Housing and Switch Assembly	24394
	Switch	24393
23.	Button Holder and Switch (2)	23503
	Pushbutton (2) (Black)	24293
24.	Right Moulding (Not Shown)	22735
25.	Left Moulding (Not Shown)	22736
26.	Front Moulding (Not Shown)	16951
27.	Bracket, Voltage Outlet (Bill Acceptor)	18104

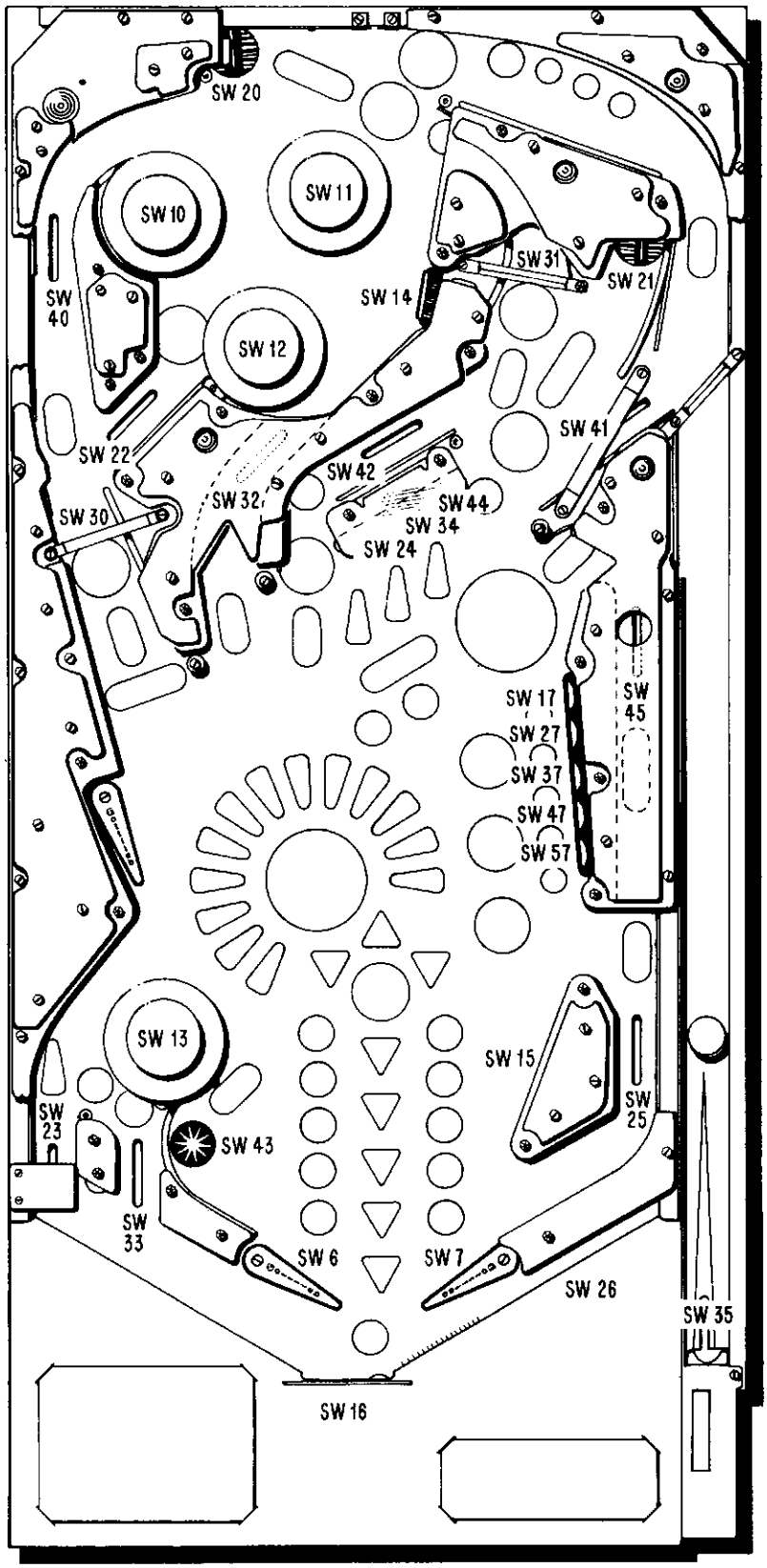

PLAYBOARD SWITCH ASSIGNMENTS

SWITCH MATRIX NUMBER	SWITCH ASSIGNMENT	PART NO.
SW 0	LEFT COIN CHUTE	P/O FRONT DOOR
SW 1	RIGHT COIN CHUTE	P/O FRONT DOOR
SW 2	CENTER COIN CHUTE	P/O FRONT DOOR
SW 3	REPLAY (CREDIT) BUTTON	18092
SW 4	LEFT ADVANCE BUTTON	23503
SW 5	RIGHT ADVANCE BUTTON	23503
SW 6	LEFT FLIPPER (SENSOR BOARD A15)	P/O MA-1334
SW 7	RIGHT FLIPPER (SENSOR BOARD A15)	P/O MA-1334
SW 10	TOP LEFT POP BUMPER	22704
SW 11	TOP RIGHT POP BUMPER	22704
SW 12	CENTER POP BUMPER	22704
SW 13	BOTTOM POP BUMPER	22704
SW 14	KICKING TARGET	27543
SW 15	KICKING RUBBER (2)	26940
SW 16	OUTHOLE	26927
SW 17	#1 SPOT TARGET ASSEMBLY	25460Z
SW 20	LEFT HOLE	18085
SW 21	RIGHT HOLE	18085
SW 22	#1 CENTER ROLLOVER	25824
SW 23	KICK SAVE ROLLOVER	25824
SW 24	#1 DROP TARGET	18094
SW 25	RIGHT RETURN ROLLOVER	25824
SW 26	BALL TROUGH	26485
SW 27	#2 SPOT TARGET ASSEMBLY	25460Z
SW 30	LEFT SPINNER	27217
SW 31	RIGHT SPINNER	27217
SW 32	#2 CENTER ROLLOVER	27598
SW 33	LEFT OUTSIDE ROLLOVER	25824
SW 34	#2 DROP TARGET	18095
SW 35	SHOOTER LANE ROLLOVER	25824
SW 36	(NOT USED)	
SW 37	#3 SPOT TARGET ASSEMBLY	25460Z
SW 40	TOP LEFT ROLLOVER	25824
SW 41	TOP RIGHT ROLLOVER	25824
SW 42	#3 CENTER ROLLOVER	27598
SW 43	STAR ROLLOVER	12881
SW 44	#3 DROP TARGET	18093
SW 45	RIGHT SIDE ROLLOVER	25824
SW 46	(NOT USED)	
SW 47	#4 SPOT TARGET ASSEMBLY	25460Z
SW 50 THRU SW 56	(NOT USED)	
SW 57	#5 SPOT TARGET ASSEMBLY	25460Z

VII. PARTS INFORMATION

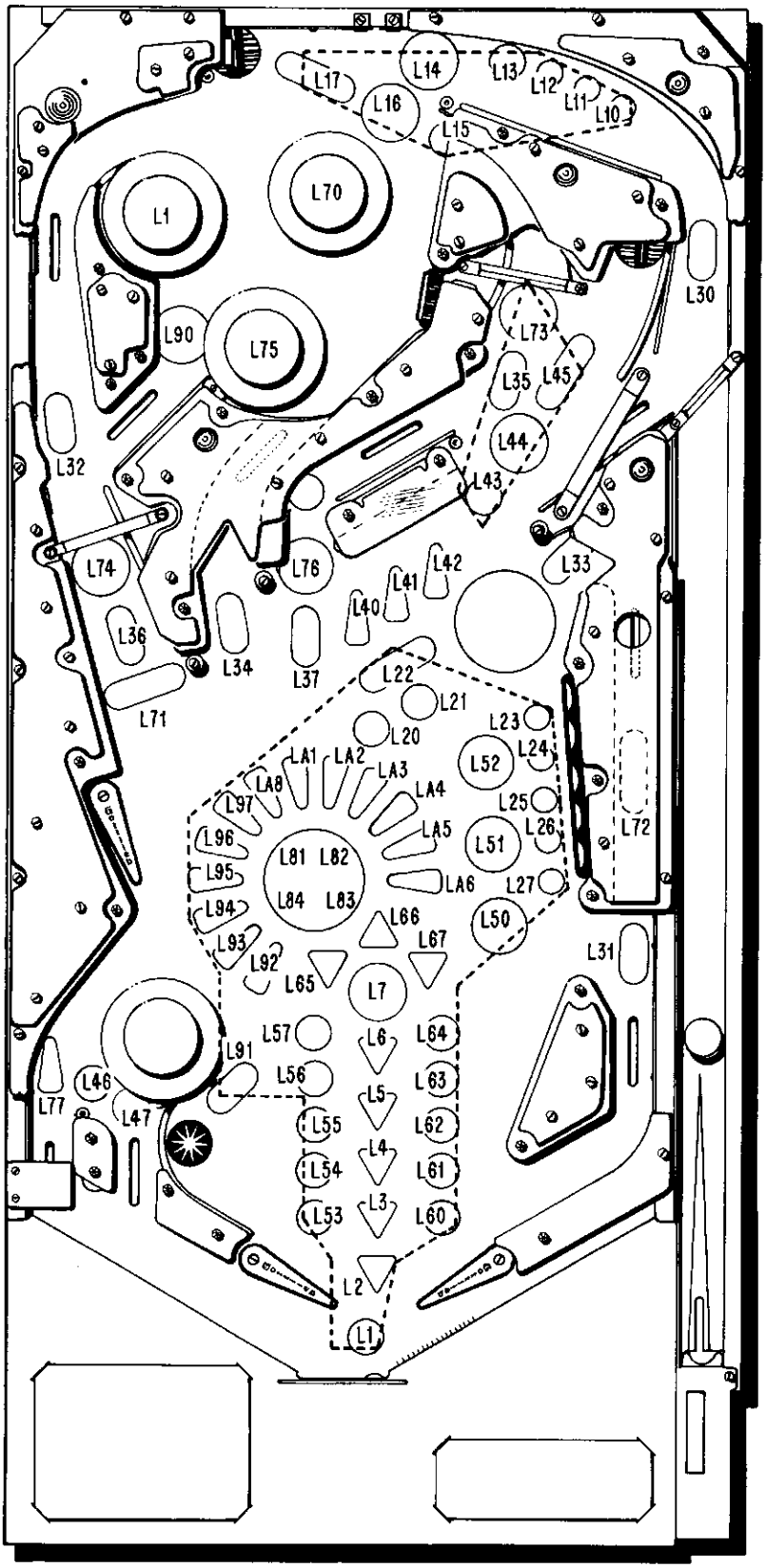

SOLENOID FUNCTIONS/LOCATIONS

SOL.0	TOP LEFT POP BUMPER	SOL.16	"MALL", #67
SOL.1	TOP RIGHT POP BUMPER	SOL.17	"HIGH SCHOOL", #67
SOL.2	CENTER POP BUMPER	*SOL.18	SCENERY 1, #67
SOL.3	BOTTOM POP BUMPER	*SOL.19	SCENERY 2, #67
SOL.4	KICKING TARGET	*SOL.20	SCENERY 3, #67
SOL.5	KICKING RUBBER	*SOL.21	SCENERY 4, #67
SOL.6	KICK SAVE	*SOL.22	SCENERY 5, #67
SOL.7	3 BANK RESET	*SOL.23	SCENERY 6, #67
SOL.8	LEFT HOLE KICKER	*SOL.24	SCENERY 7, #67
SOL.9	RIGHT HOLE KICKER	SOL.25	LIGHTBOX ILLUMINATION RELAY (A)
SOL.10	"MULTI-BALL", #67 (2)	SOL.26	TICKET/COIN METER ENABLE
SOL.11	"SPECIAL", #67 (2)	SOL.27	BALL RELEASE
SOL.12	"GAS STATION", #67	SOL.28	OUTHOLE
SOL.13	"ALLEY", #67	SOL.29	KNOCKER
SOL.14	"BURGER GRILL", #67	SOL.30	TILT RELAY (T)
SOL.15	"BANK", #67	SOL.31	GAME OVER RELAY (Q)

*SEE PAGE 65 FOR LAMP LOCATIONS.

PLAYBOARD LAMP ASSIGNMENTS

LAMP NUMBER	LAMP ASSIGNMENT
L0	"SHOOT AGAIN"
L1	Top Left POP Bumper
L2	"10,000 BONUS"
L3	"20,000 BONUS"
L4	"50,000 BONUS"
L5	"100,000 BONUS"
L6	"200,000 BONUS"
L7	"500,000 BONUS"
L10	Skill Shot,"10,000"
L11	Skill Shot,"20,000"
L12	Skill Shot,"50,000"
L13	Skill Shot,"100,000"
L14	'PIK-5"
L15	Left Hole,"ADD YELLOW BADGE"
L16	Left Hole,"SUPERCOP"
L17	Left Hole,"MYSTERY"
L20	3 Bank "ADVANCE BONUS"
L21	3 Bank "ONE ARREST"
L22	3 Bank "MILLION X MULTIPLIER"
L23	#1 Spot Target
L24	#2 Spot Target
L25	#3 Spot Target
L26	#4 Spot Target
L27	#5 Spot Target
L30	Squad Car, "1"
L31	Squad Car, "2"
L32	Squad Car, "3"
L33	Squad Car, "4"
L34	Squad Car, "5"
L35	Squad Car, "6"
L36	Squad Car, "7", Left
L37	Squad Car, "8", Right
L40	#1 Drop Target
L41	#2 Drop Target
L42	#3 Drop Target
L43	Right Hole
L44	Right Hole,"COLLECT POP BONUS'
L45	Right Hole,"MYSTERY'
L46	Outside Rollover,"RED BADGE'
L47	Outside Rollover,"YELLOW BADGE
L50	Spot Target,"ONE ARREST'
L51	Spot Target,"ADVANCE MULTIPLIER'
L52	Spot Target,"EXTRA BALL'
L53	#1 Yellow Badge
L54	#2 Yellow Badge
L55	#3 Yellow Badge
L56	#4 Yellow Badge
L57	#5 Yellow Badge
L60	#1 Red Badge
L61	#2 Red Badge
L62	#3 Red Badge
L63	#4 Red Badge
L64	#5 Red Badge
L65	"2X" Multiplier
L66	"3X" Multiplier
L67	"5X" Multiplier
L70	Top Right Pop Bumper
L71	West Side"LOOP COMPLETE"
L72	East Side"LOOP COMPLETE"
L73	Right Spinner"INCREASE JACKPOT"
L74	Left Spinner"INCREASE JACKPOT"
L75	Center Pop Bumper
L76	"LIGHT KICK SAVE"
L77	"KICK SAVE"
L80	#1 "SPECIAL"
L81	#2 "SPECIAL"
L82	#3 "SPECIAL"
L83	#4 "SPECIAL"
**L84	"W"
**L85	"W"
**L86	"E"
**L87	"E"
L90	"LIGHT COLLECT POP BONUS"
L91	"SPOT SQUAD CAR"
L92	#1 Bullet
L93	#2 Bullet
L94	#3 Bullet
L95	#4 Bullet
L96	#5 Bullet
L97	#6 Bullet
LA0	#7 Bullet
LA1	#8 Bullet
LA2	#9 Bullet
LA3	#10 Bullet
LA4	#11 Bullet
LA5	#12 Bullet
LA6	#13 Bullet
LA7	(Not Used)
**LB0	"A"
**LB1	"A"
**LB2	"P"
**LB3	"P"
**LB4	"O"
**LB5	"O"
**LB6	"N"
**LB7	"N"

LAMP SOCKETS WITH DIODE BOARD	
TYPE	PART NO.
1-1/8" BRACKET	26621
1/2" BRACKET	26622
LAYDOWN	26623

** LAMPS L84 THRU L87 AND LAMPS LB0 THRU LB7 ARE LOCATED ON THE LIGHTBOX INSERT. SEE PAGE 65 FOR LOCATIONS.

VII. PARTS INFORMATION

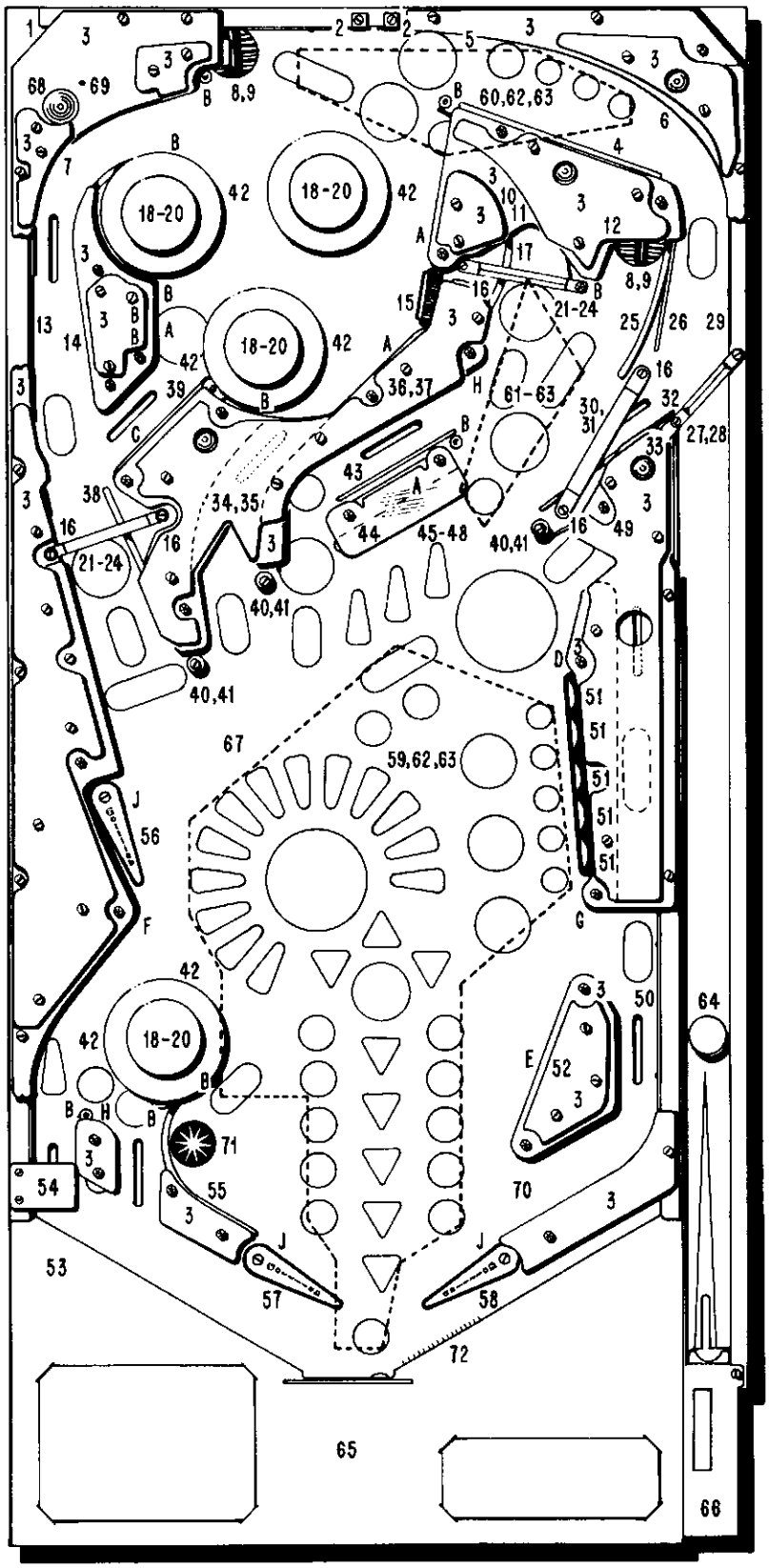

PLAYBOARD PARTS INFORMATION

PARTS LIST

ITEM	DESCRIPTION	PART NO.
1	FLAT RAIL	25789
2	SUPPORT BRACKET (2)	27391
3	PLASTIC SHIELD SET	27461,27462
4	BALL GUIDE RAIL	25347
5	DECAL	27505
6	DECAL	27507
7	DECAL	27504
8	BALL HOLE KICKER ASSEMBLY (2) (SEE EXPLODED VIEW ILLUSTRATION)	MA-1493
9	BALL SNUBBER (2)	27128
10	FLAT RAIL	27337
11	DECAL	27508
12	BALL DEFLECTOR	21158
13	FLAT RAIL	27401
14	BALL GUIDE RAIL	27317
15	KICKING TARGET ASSEMBLY (SEE EXPLODED VIEW ILLUSTRATION)	MA-1485
16	SPINNER SPACER (5)	27244
17	BALL GUIDE RAIL	27316
18	POP BUMPER CAP, YELLOW (4)	10434T
19	POP BUMPER SKIRT, YELLOW (4)	10433T
20	POP BUMPER BODY AND SOCKET, YELLOW (4)	MA-243
21	SWINGING TARGET ASSEMBLY (2)	24494
22	SWITCH ROD (2)	27196
23	NYLON WASHERS (4)	20407
24	TARGET SHIELD (2)	14043
25	BALL GUIDE RAIL	18764
26	BALL GUIDE RAIL	4833
27	METAL SHIELD	17300
28	ROLLUNDER GATE WIREFORM	22112
29	FLAT RAIL	27336
30	METAL SHIELD	1673
31	GATE WIREFORM	1674
32	BALL GUIDE RAIL	18563
33	"Z" BRACKET	27501
34	FLAT RAIL	27339
35	DECAL	27503
36	FLAT RAIL	27338
37	DECAL	27502
38	BALL GUIDE RAIL	27315
39	BALL GUIDE RAIL	25348
40	THREADED SHOULDER PIN (3)	26531
41	1/2"x 7/8" BUMPER, YELLOW (3)	26648
42	TRIM PLATTER (7)	25732
43	BALL GUIDE RAIL (2)	13782
44	METAL SHIELD	27311
45	DROP TARGET ASSEMBLY,(3 POSITION) (SEE EXPLODED VIEW ILLUSTRATION)	MA-1481
46	DROP TARGET RESET COIL	26926
47	DROP TARGET ARM, WHITE (3)	11905Z
48	DROP TARGET DECAL (3)	25834
49	DECAL	27506
50	FLAT RAIL	27340
51	SPOT TARGET ASSEMBLY, YELLOW (5)	25460T
52	KICKER ASSEMBLY	MA-1373
53	KICK SAVE ASSEMBLY (SEE EXPLODED VIEW ILLUSTRATION)	MA-1413
54	BALL SNUBBER	27180
55	BALL GUIDE RAIL	27333
56	FLIPPER ASSEMBLY (SEE EXPLODED VIEW ILLUSTRATION)	MA-1250A
	FLIPPER COIL	26646
	FLIPPER SWITCH ASSEMBLY	26439
57	FLIPPER ASSEMBLY (SEE EXPLODED VIEW ILLUSTRATION)	MA-1250B
	FLIPPER COIL	25959
	FLIPPER SWITCH ASSEMBLY	26439
58	FLIPPER ASSEMBLY (SEE EXPLODED VIEW ILLUSTRATION)	MA-1251B
	FLIPPER COIL	25959
	FLIPPER SWITCH ASSEMBLY	26438
59	LIGHT STRIP ASSEMBLY,1A22 (50 LAMPS)	MA-1483
60	LIGHT STRIP ASSEMBLY,2A22 (8 LAMPS)	MA-1483A
61	LIGHT STRIP ASSEMBLY,3A22 (5 LAMPS)	MA-1483B
62	LIGHT STRIP MOUNTING BRACKET (12)	27427
63	HAIRPIN CLIP (12)	6947
64	1-1/16" STEEL BALL (3)	21864
65	CARDHOLDER	25649-724
66	SHOOTER GAUGE	9767-724
67	MYLAR OVERLAY	27569
68	PLASTIC DOME, CLEAR (4)	26293P
69	PLASTIC RIVET, BLACK (8)	MP-10
70	TILT SWITCH AND BRACKET ASSEMBLY	9141
71	ROLLOVER BUTTON, WHITE	11968
72	VELCRO STRIP	MP-18

RUBBER RINGS

ITEM	DESCRIPTION	PART NO.
A	1-1/2" (4)	10220
B	MINI-POST (11)	15705
C	2"	10221
D	1"	10219
E	2-1/2"	10222
F	3/4"	10218
G	3/8"	10217
H	7/16" (2)	17493
J	FLIPPER, RED (3)	13151

MISCELLANEOUS PARTS

DESCRIPTION	PART NO.
MINI-POST SCREW	14792
PLASTIC POST, RED	11561U
SUPPORT POST	20635P
SIAMESE POST, RED	17492U
"T" RELAY	MA-25
"Q" RELAY	MA-23
"A" RELAY	MA-1021

VII. PARTS INFORMATION

KICK SAVE PARTS

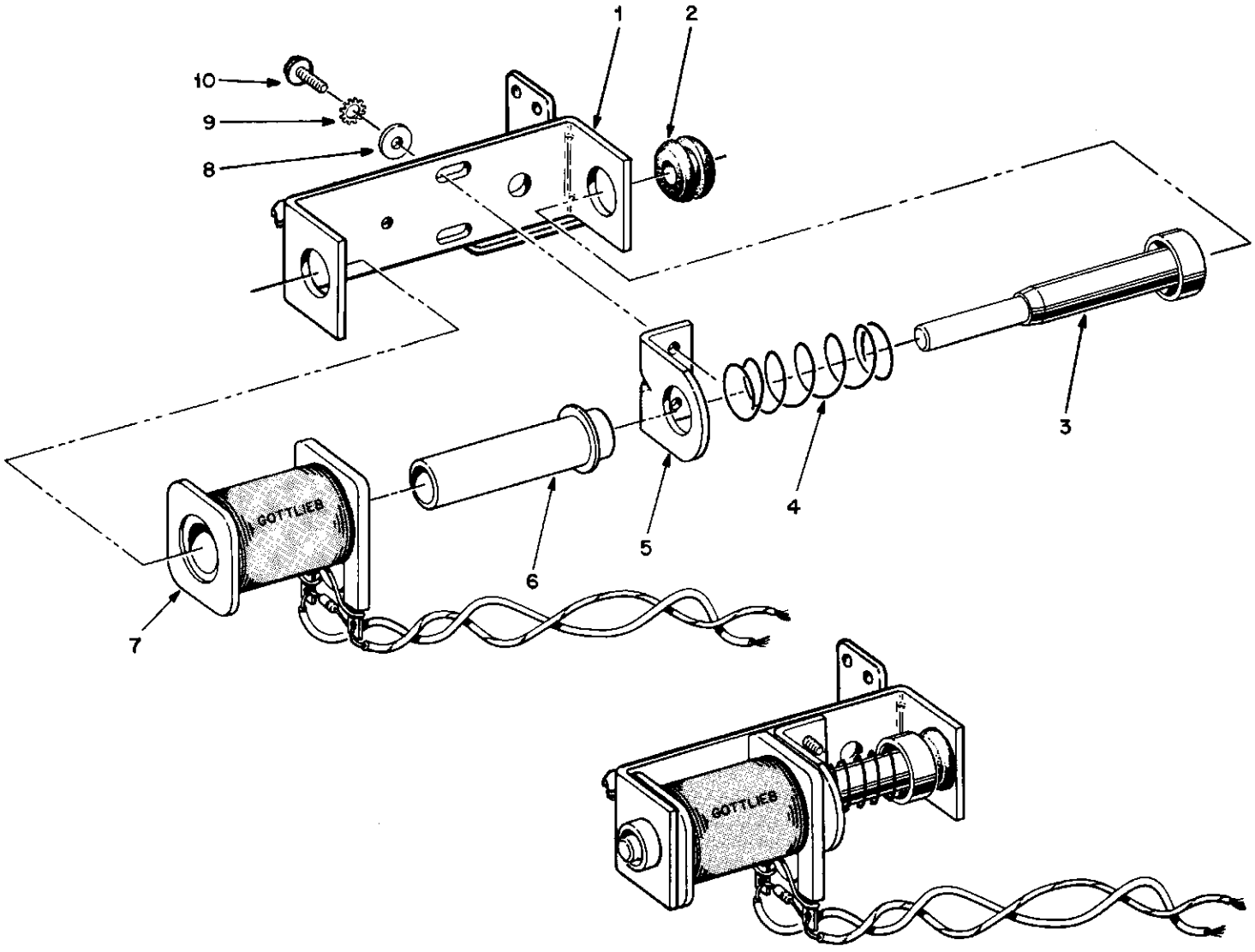

ITEM	DESCRIPTION	PART NO.
	Kick Save Assembly	MA-1413
1	Mounting Bracket	21854
2	Rubber Grommet	21000
3	Plunger Sub-Assembly	27138
4	Kicker Return Spring	590
5	Coil Mounting Bracket	20559
6	Sleeve	6087
7	Coil and Diode (See Schematic Diagram)	
8	#6 Washer (2)	FA-615
9	#6 External Lockwasher (2)	FA-631
10	6-32 X 3/8" Rolok (2)	FA-45

Patent Number: 4,804,186

DROP TARGETS	WITHOUT TRIP COIL				WITH TRIP COIL	
	ITEM 14 COIL PLATE	ITEM 18 GUIDE PLATE	ITEM 22 RESET ARM	ITEM 30 SWITCH PLATE	ITEM 48 COIL PLATE	ITEM 51 GUIDE PLATE
1	25618-1	25621-1	25615-2	25617-1		
1 WITH TRIP COIL		25621-1	25615-2	25617-1	25619-1	25623-1
2	25618-2	25621-2 2 USED	25615-2	25617-2		
2 WITH TRIP COIL		25621-2	25615-2	25617-2	25619-2	25623-2
3	25618-3	25621-3 2 USED	25615-3	25617-3		
3 WITH TRIP COIL		25621-3	25615-3	25617-3	21619-3	25623-3
4	25618-4	25621-4 2 USED	25615-4	25617-4		
4 WITH TRIP COIL		25621-4	25615-4	21617-4	25619-4	25623-4
5	25618-5	25621-5 2 USED	25615-5	25617-5		
5 WITH TRIP COIL		25621-5	25615-5	25617-5	25619-5	25623-5
6	26518-6	25621-6 2 USED	25615-3 2 USED	25617-6		
6 WITH TRIP COIL		25621-6	25615-3 2 USED	25617-6	25619-6	25623-6
7	25618-7	25621-7 2 USED	25615-3 25615-4	25617-7		
7 WITH TRIP COIL		25621-7	25615-3 25615-4	25617-7	25619-7	25623-7
8	25618-8	25621-8 2 USED	25615-4 2 USED	25617-8		
8 WITH TRIP COIL		25621-8	25615-4 2 USED	25617-8	25619-8	25623-8

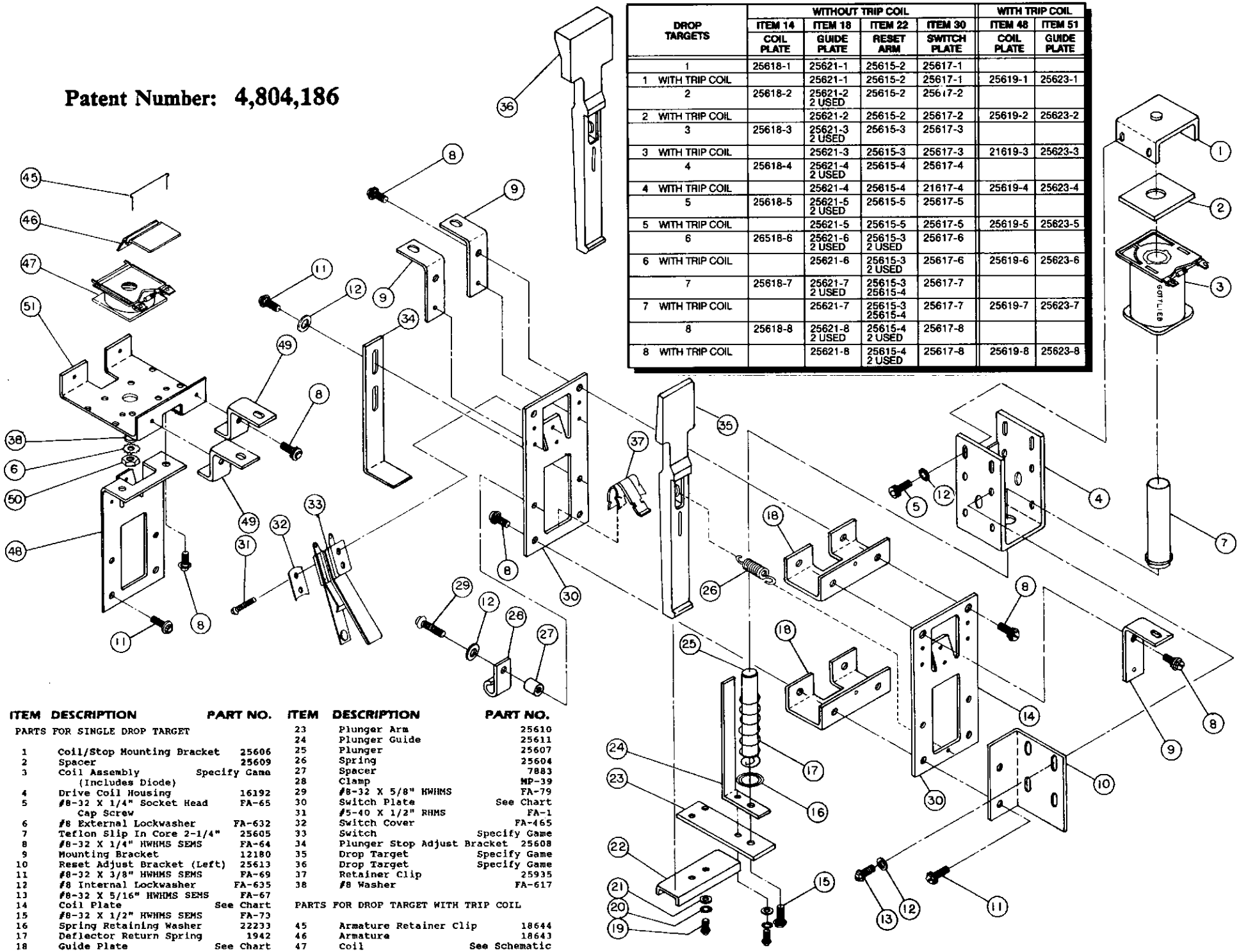

ITEM	DESCRIPTION	PART NO.
	PARTS FOR SINGLE DROP TARGET	
1	Coil/Stop Mounting Bracket	25606
2	Spacer	25609
3	Coil Assembly (Includes Diode)	Specify Game
4	Drive Coil Housing	16192
5	#8-32 X 1/4" Socket Head Cap Screw	FA-65
6	#8 External Lockwasher	FA-632
7	Teflon Slip In Core 2-1/4"	25605
8	#8-32 X 1/4" HWHMS SEMS	FA-64
9	Mounting Bracket	12180
10	Reset Adjust Bracket (Left)	25613
11	#8-32 X 3/8" HWHMS SEMS	FA-69
12	#8 Internal Lockwasher	FA-635
13	#8-32 X 5/16" HWHMS SEMS	FA-67
14	Coil Plate	See Chart
15	#8-32 X 1/2" HWHMS SEMS	FA-73
16	Spring Retaining Washer	22233
17	Deflector Return Spring	1942
18	Guide Plate	See Chart
19	#5-40 X 1/4" RHMS	FA-8
20	#5 External Lockwasher	FA-630
21	#5 Washer	FA-622
22	Reset Arm	See Chart

ITEM	DESCRIPTION	PART NO.
23	Plunger Arm	25610
24	Plunger Guide	25611
25	Plunger	25607
26	Spring	25604
27	Spacer	7883
28	Clamp	MP-39
29	#8-32 X 5/8" HWHMS	FA-79
30	Switch Plate	See Chart
31	#5-40 X 1/2" RHMS	FA-1
32	Switch Cover	FA-465
33	Switch	Specify Game
34	Plunger Stop Adjust Bracket	25608
35	Drop Target	Specify Game
36	Drop Target	Specify Game
37	Retainer Clip	25935
38	#8 Washer	FA-617
	PARTS FOR DROP TARGET WITH TRIP COIL	
45	Armature Retainer Clip	18644
46	Armature	18643
47	Coil	See Schematic
48	Guide Plate	See Chart
49	Mounting Bracket (Formed)	25612
50	#8-32 Hex Nut	FA-652
51	Coil Plate	See Chart

VII. PARTS INFORMATION

FLIPPER PARTS

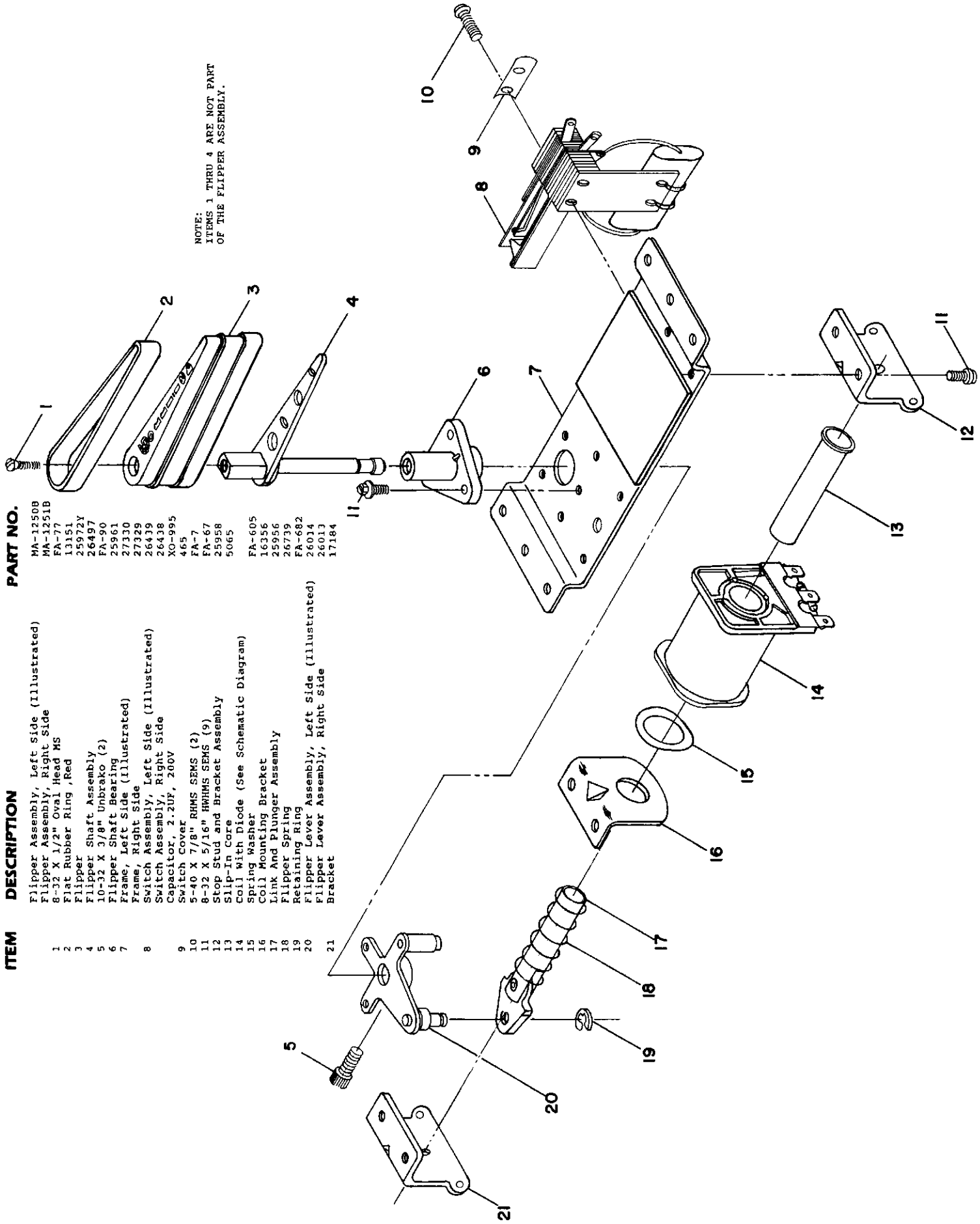

NOTE:
ITEMS 1 THRU 4 ARE NOT PART OF THE FLIPPER ASSEMBLY.

ITEM	DESCRIPTION	PART NO.
	Flipper Assembly, Left Side (Illustrated)	MA-1250B
	Flipper Assembly, Right Side	MA-1251B
1	8-32 X 1/2" Oval Head MS	FA-77
2	Flat Rubber Ring ,Red	13151
3	Flipper	25972Y
4	Flipper Shaft Assembly	26497
5	10-32 X 3/8" Unbrako (2)	FA-90
6	Flipper Shaft Bearing	25961
7	Frame, Left Side (Illustrated)	27330
	Frame, Right Side	27329
8	Switch Assembly, Left Side (Illustrated)	26439
	Switch Assembly, Right Side	26438
	Capacitor, 2.2UF, 200V	XO-995
9	Switch Cover	465
10	5-40 X 7/8" RHMS SEMS (2)	FA-7
11	8-32 X 5/16" HWHMS SEMS (9)	FA-67
12	Stop Stud and Bracket Assembly	25958
13	Slip-In Core	5065
14	Coil With Diode (See Schematic Diagram)	
15	Spring Washer	FA-605
16	Coil Mounting Bracket	16356
17	Link And Plunger Assembly	25956
18	Flipper Spring	26739
19	Retaining Ring	FA-682
20	Flipper Lever Assembly, Left Side (Illustrated)	26014
	Flipper Lever Assembly, Right Side	26013
21	Bracket	17184

XI. PARTS INFORMATION

BALL HOLE KICKER PARTS

ITEM	DESCRIPTION	PART NO.
1	6 x 1/2" HWHSMS (2)	FA-270
2	Ball Snubber	16038
3	Metal Hole Liner	11151
4	Hole Base Plate (Specify Color)	15707
5	Hole Switch Arm (Specity Color)	15708
6	Ball Cam (See Tables)	
7	Nylon Washer	6443
8	Spring Cam (See Tables)	
9	Spring (See Tables)	
10	Fulcrum	15819
11	E-Ring (3)	FA-682
12	Link And Plunger Assy.	22234
13	Spring Retaining Washer	22233
14	Spring	1636
15	Mounting Bracket	15409
16	Coil With Diode (Specify Game)	
17	Coil Sleeve	5064
18	Coil Stop And Mounting Bracket	20597
19	#8 Washer (2)	FA-617
20	8-32 x 5/16" HWHMS SEMS(2)	FA-67
21	Ball Snubber	21532
22	Ball Snubber	21159
23	Spring Cam (15° OFFSET) (See Table)	18993

ASSEMBLY WITH FULCRUM	BALL CAM	SPRING CAM (NO SPRING)	SPRING	SPRING SOLID HEIGHT
A-15827	A-15822	A-15826	A-9758	5/8"
A-15828	A-15822	A-15826	A-15598	11/16"
A-16083	A-15822	A-15826	A-8727	7/8"
A-25842	A-15822	A-18993	A-15598	11/16"

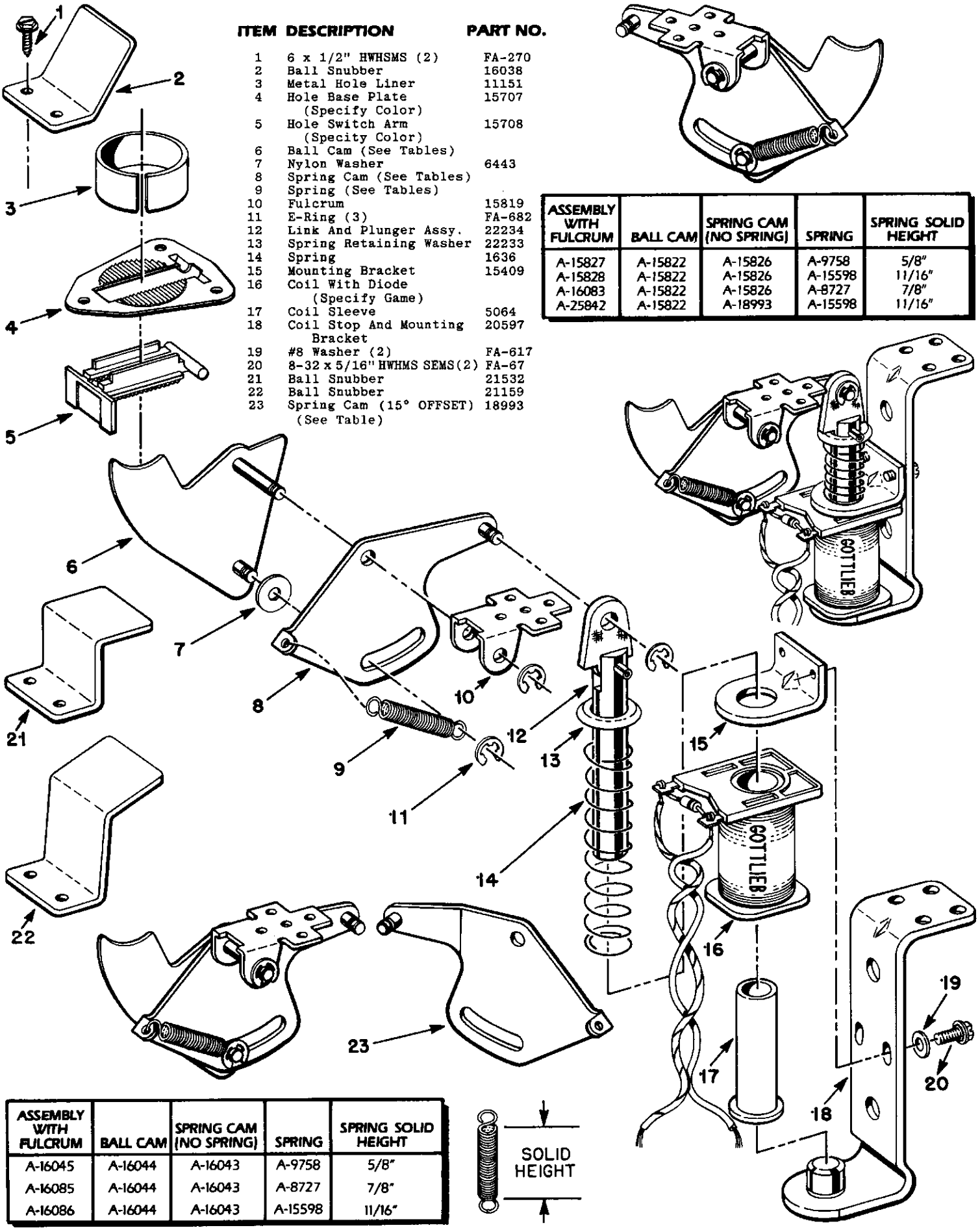

ASSEMBLY WITH FULCRUM	BALL CAM	SPRING CAM (NO SPRING)	SPRING	SPRING SOLID HEIGHT
A-16045	A-16044	A-16043	A-9758	5/8"
A-16085	A-16044	A-16043	A-8727	7/8"
A-16086	A-16044	A-16043	A-15598	11/16"

VII. PARTS INFORMATION

KICKING TARGET ASSEMBLY

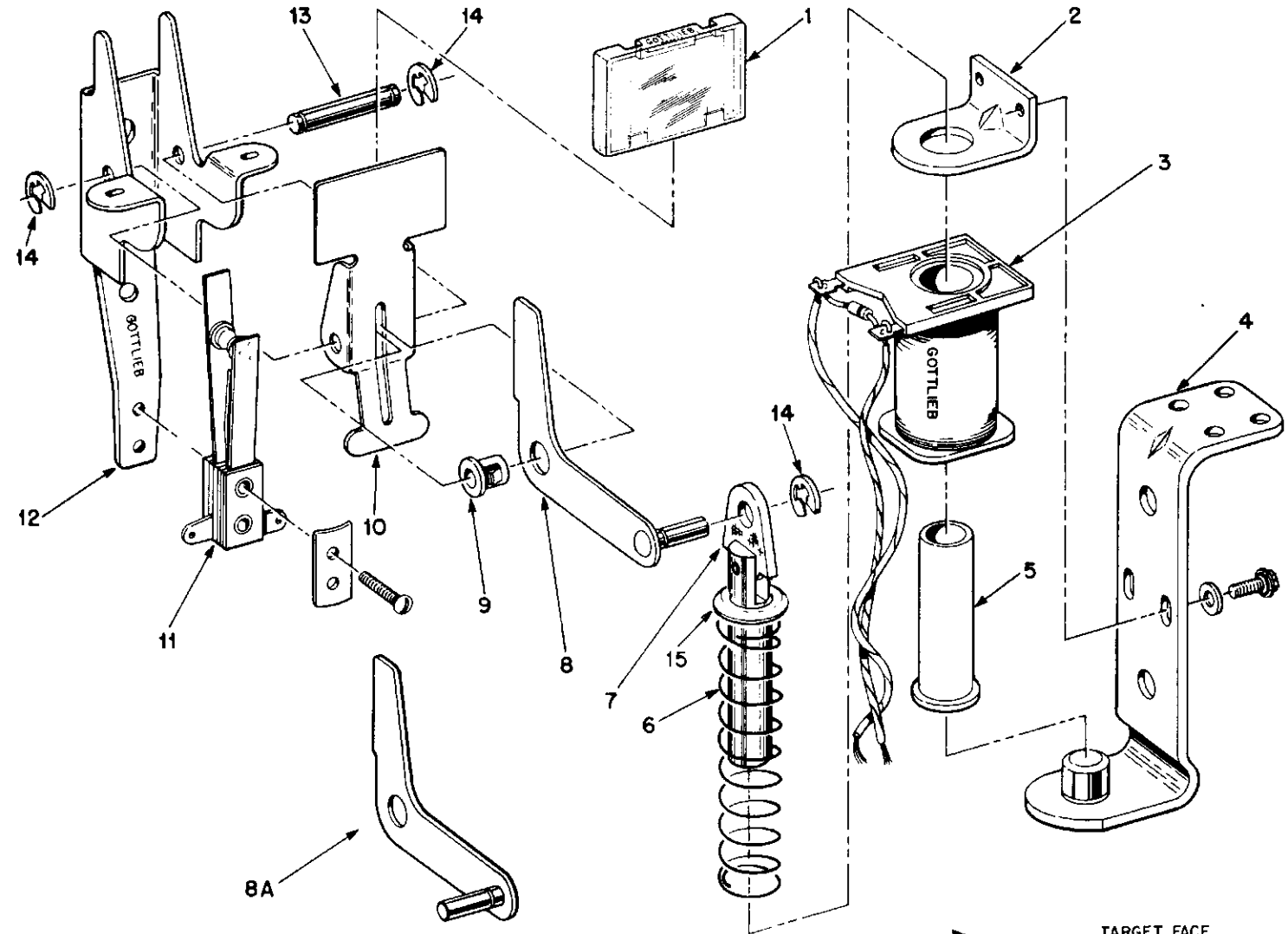

ITEM	DESCRIPTION	PART NO.
	Kicking Target Assembly	27454
1	Plastic Shield	20210P
2	Mounting Bracket	15409
3	Coil	5195
4	Coil Stop And Mtg. Bracket	20597
5	Coil Sleeve	5064
6	Spring	1636
7	Link and Plunger Assembly	22425
8	Target Kicker Cam (Used)	20209
8A	Target Kicker Cam (Shown)	20494
9	Snap Bushing	MP-15
10	Target Arm	20207
11	Actuating Switch	27543
12	Target Housing	20206
13	Target Shaft	20211
14	E-Ring	FA-682
15	Spring Retaining Washer	22233

KICKING TARGET ADJUSTMENT

Push the PLUNGER down until it "bottoms out" in the coil HOUSING. Push the TARGET FACE in the direction of the arrow shown until it makes contact with the vertical leg of the KICKER CAM. The vertical leg of the cam is located behind the kicking target and is not shown.

Observe that the gap between the ACTUATING SWITCH contacts is at least 1/32nd of an inch. If not, bend the switch's BACKING BLADE in the proper direction.

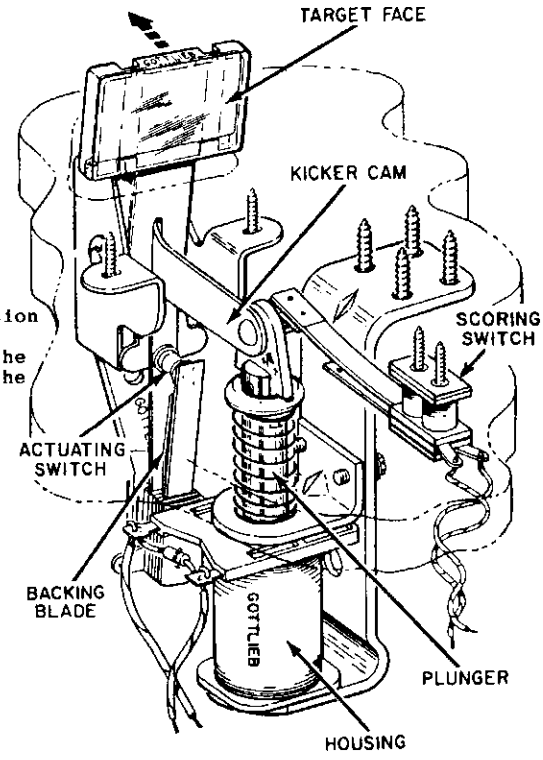

XI. PARTS INFORMATION

LIGHTBOX INSERT LAMP IDENTIFICATION

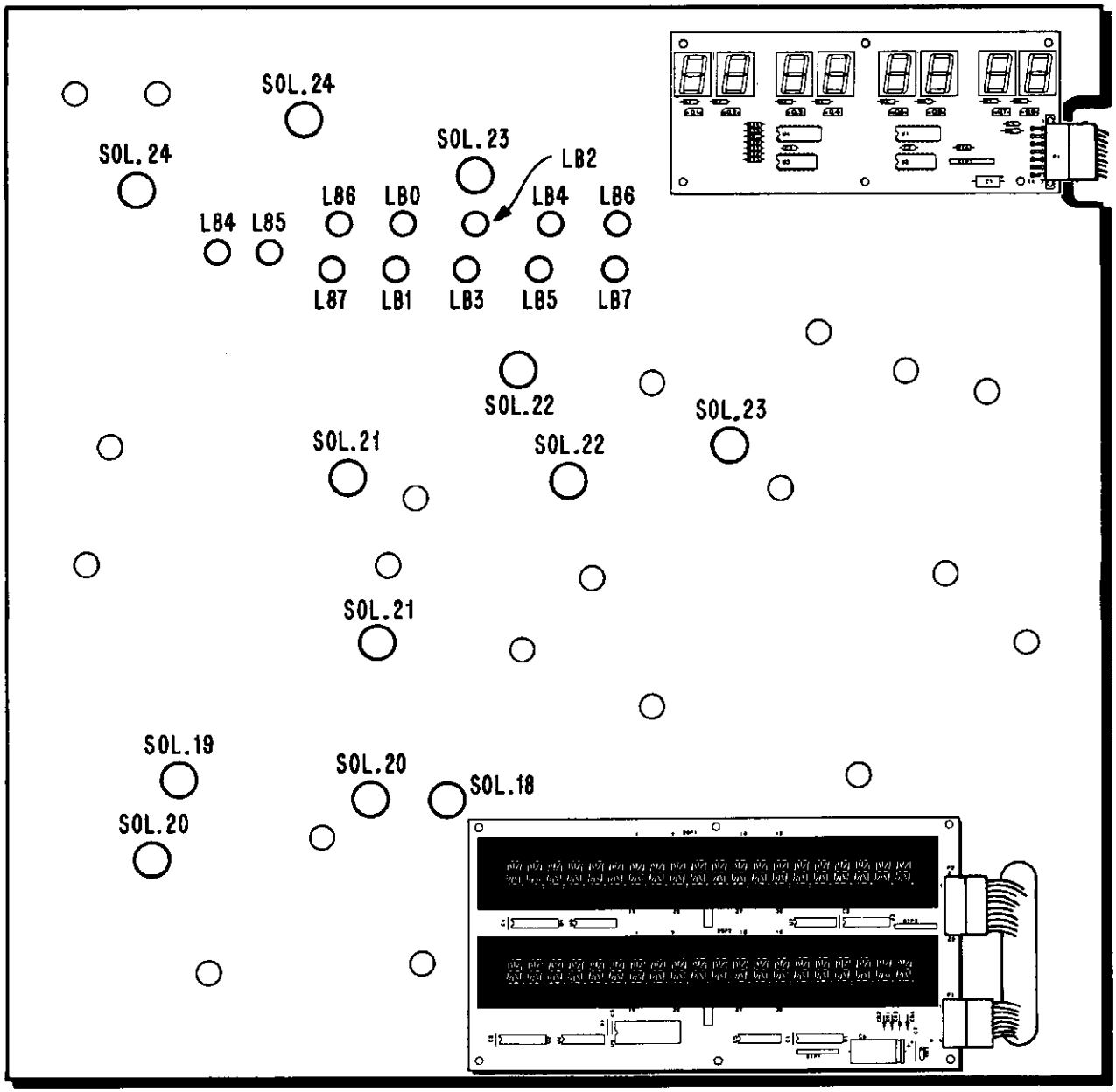

LAMP NUMBER	LAMP ASSIGNMENT
L84	"W"
L85	"W"
L86	"E"
L87	"E"
LB0	"A"
LB1	"A"
LB2	"P"
LB3	"P"
LB4	"O"
LB5	"O"
LB6	"N"
LB7	"N"

SOLENOID FUNCTIONS

SOL. 18	SCENERY 1, #67
SOL. 19	SCENERY 2, #67
SOL. 20	SCENERY 3, #67
SOL. 21	SCENERY 4, #67
SOL. 22	SCENERY 5, #67
SOL. 23	SCENERY 6, #67
SOL. 24	SCENERY 7, #67

NOTE:
LAMPS NOT DESIGNATED ARE
GENERAL ILLUMINATION, TYPE #44.

XI. PARTS INFORMATION

UNIQUE PARTS

The following listing denotes new parts and assemblies unique to Deadly Weapon, Game #724. Part Numbers prefixed with an asterisk (*) will be illustrated or can be located on pages 32 and 56 thru 65. Numbers in parenthesis ( ) indicate multiple quantities.

PLAYBOARD

ITEM/DESCRIPTION	PART NO.
Hairpin Clip (12)	*6947
Support Bracket (2)	*27391
Flat Rail	*27401
Light Strip Mounting Bracket (12)	*27427
Plastic Shield Set	*27461 and *27462
"Z" Bracket	*27501
Decal, Grill	*27502
Decal, Alley	*27503
Decal, Gas Station	*27504
Decal, Deli	*27505
Decal, High School	*27506
Decal, Mall	*27507
Decal, Bank	*27508
Mylar Overlay	*27569
Light Strip Assembly,1A22	*MA-1483
Light Strip Assembly,2A22	*MA-1483A
Light Strip Assembly,3A22	*MA-1483B

LIGHTBOX

ITEM/DESCRIPTION	PART NO.
Lightbox (Screened)	27514-724
Styrene Backglass Art	27500-724
Led Display Board Assembly (A23)	MA-1411

CABINET

ITEM/DESCRIPTION	PART NO.
Shooter Gauge (Screened)	*9767-724
Cardholder (Screened)	*25649-724
Cabinet (Screened)	*27115-724
Transformer Panel Assembly	*MA-1473

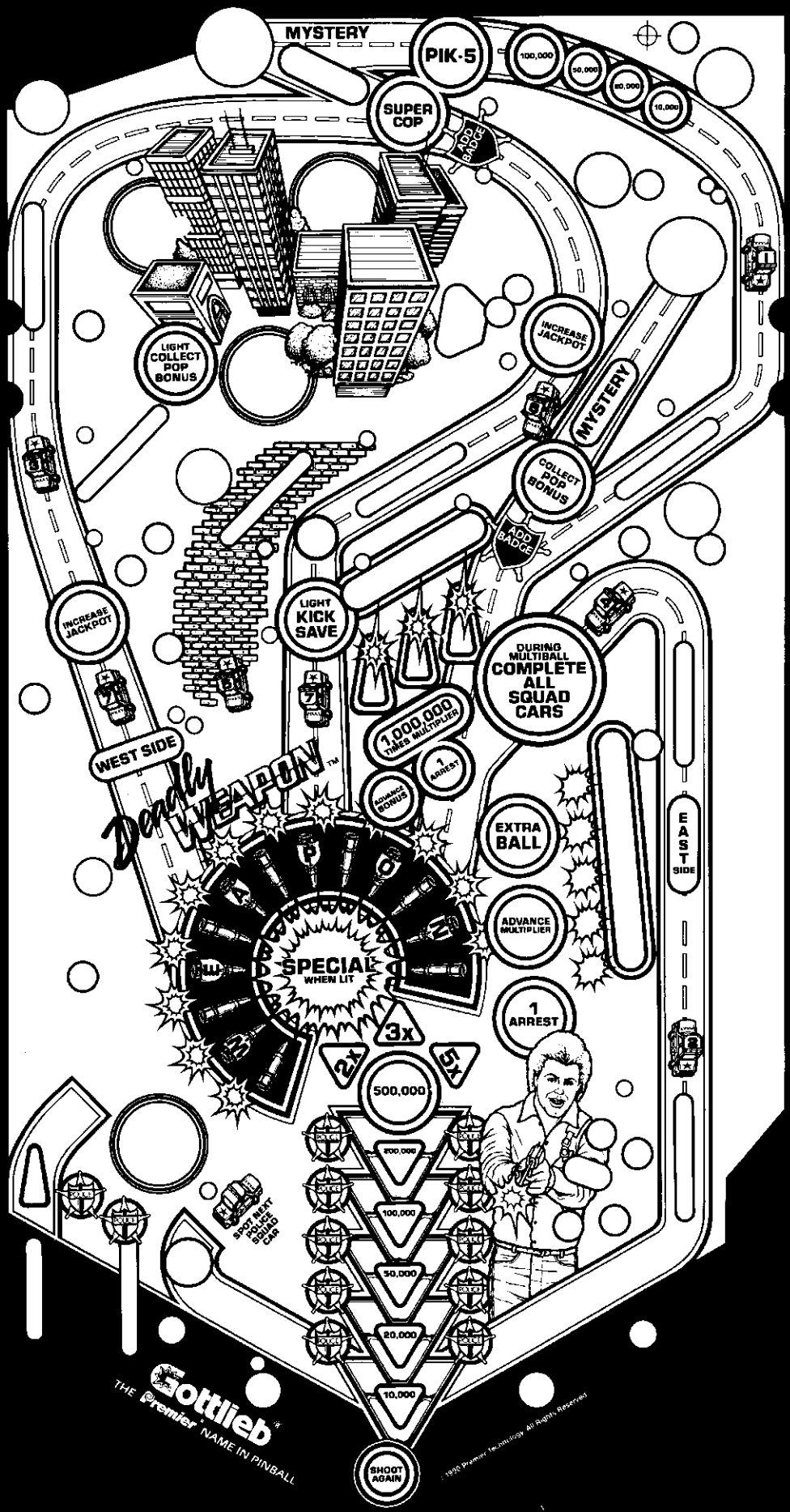

Premier®
Technology

759 INDUSTRIAL DRIVE
BENSENVILLE, IL 60106
1-708-350-0400
TELEX 215009 PRMR
FAX: 1-708-350-1097

THE PREMIER HOTLINE
1-800-444-0761

© 1990 Premier Technology
Copyright All Rights Reserved
Printed In U.S.A.