Bally BMX

GAME
1276
FO747

Bally

© BALLY MFG. CORP. 1983
ALL RIGHTS RESERVED

PINBALL DIVISION

9700 O'Leary Drive, Bensenville, Illinois 60106
Telephone: (312) 860-6400

Installation and General Game Operation Instructions

INDEX

PAGE

I. INSTALLATION 1

II. GENERAL GAME OPERATION 2

III. BOOKKEEPING FUNCTIONS 3

IV. FEATURE OPERATION AND SCORING 4

V. GAME ADJUSTMENTS 5

A. PLAYFIELD ADJUSTMENTS 5

B. BACKBOX ADJUSTMENTS 5

CREDITS/COIN 5

MAXIMUM CREDITS 6

BALLS/GAME 6

MATCH FEATURE OPTION 6

CREDIT DISPLAY 6

HIGH SCORE FEATURE OPTION 6

HIGH SCORE TO DATE 6

GAME FEATURE OPTIONS 7

SOUND OPTION 7

C. FRONT DOOR GAME ADJUSTMENTS

HIGH SCORE FEATURE 8

HIGH SCORE TO DATE FEATURE 8

VI. RECOMMENDED SCORE CARDS 11

VII. RECOMMENDED SETTINGS 12

VIII. ROUTINE MAINTENANCE ON LOCATION 13

IX. TROUBLE SHOOTING ON LOCATION 13

X. SERVICE/PARTS 19

XI. PARTS LIST 20-35

BLOCK DIAGRAM—ELECTRONIC PINBALL GAME

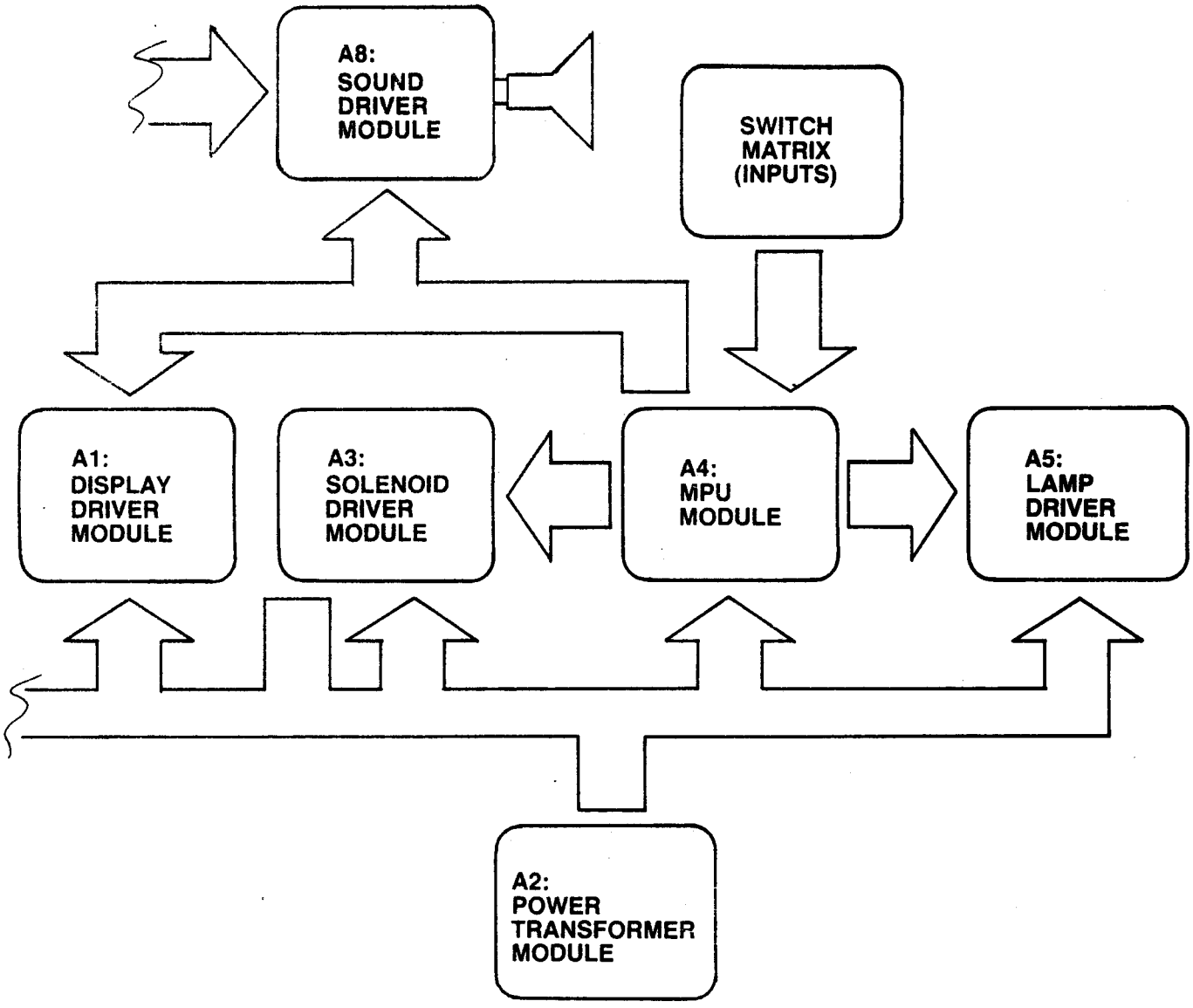

I. INSTALLATION

Assemble the game as follows:

Bolt legs to cabinet. Bolt back box to cabinet. Use flat washers under bolt heads. Gently feed cable connectors and ground braid through cable port in back box. Screw ground braid to braid in back box. Carefully and fully insert connectors on printed circuit assemblies.

On all games there are certain items that should be checked after shipment. These are visual inspections which may avoid time consuming service work later. Minor troubles caused by abusive handling in shipment are unavoidable. Cable connectors may be loosened, switches (especially tilt switches) may go out of adjustment. Plumb bob tilt switch should always be adjusted after game is set on location and leg levelers are adjusted.

Visual inspections before plugging in line cord:

1. Check that all cable connectors are completely seated on printed circuit assemblies.
2. Check that cables are clear of all moving parts.
3. Check for any wires that may have become disconnected.
4. Check switches for loose solder or other foreign material that may have come loose in shipment and could cause shorting of contacts.
5. Check wires on coils for proper soldering. Cold solder connections may not show up in factory inspection, but vibration in shipment may break contact.
6. Check that fuses are firmly seated and making good contact.
7. Check the transformer for any foreign material shorting across wiring lugs.
8. Check wiring of transformer to correspond to location voltage. See figure 1.

Check adjustment of the three (normally open) tilt switches:

1. Panel tilt on bottom of playfield panel.
2. Plumb bob tilt on left side of cabinet near front door.
3. Ball tilt above plumb bob tilt. Insert the smaller ball (15/16" dia.) into the ball tilt assembly, and adjust the bracket so the ball will roll free to contact the switch blade, if front of cabinet is

TRANSFORMER CONNECTION INSTRUCTIONS

REFER TO POWER SUPPLY SCHEMATIC IN GAME MANUAL FOR TABLE "A"

115 VAC, 2-8, 3-6, 7-10
120 VAC, 2-8, 4-6, 7-11
220 VAC, 4-8, 7-9
240 VAC, 4-8, 7-11

PART OF POWER–TRANSFORMER MODULE A2, LOCATED IN LOWER CABINET

II. GENERAL GAME OPERATION

Place ball into playfield by outhole.

Coin game. Coin should be rejected. Plug in line cord. Move power ON-OFF master switch at bottom right front corner of cabinet to 'ON' position. The game will play a power-up tune to announce game-readiness. Drop targets are reset, scores are set to zero, alternating with the 'High Score to Date,' and the game is ready for play. Coin game. The game should accept the coin and post credits* for coins accepted (adjustable). Pressing the credit button on the door will cause the outhole kicker to serve the ball to the shooter alley. The 1st player-up lite is lit. A game-up tune* is played to announce play-readiness.

One player is posted each additional time the credit button is pressed (one to four can play). The credits are reduced by one each time the credit button is pressed until the credits are reduced to zero.

Shooting the ball initiates play.

The game awards all points earned by the player. If spinner is turning and scoring when the ball hits a target, the spinner and the target scores are awarded.

When the ball enters the outhole, the bonus score is added to the total score. The player-up and/or ball in play on the back box is advanced one position. The outhole kicker serves the ball to the shooter alley and play is resumed. This continues until each player has played the allowable number of balls per game (adjustable). At this time the 'Game Over' light is lit. A random Match* number appears and the 'Match' light is lit. If the number is the same as the last two digits in a player's score, a free game is awarded.

Extra balls won during the course of the game are played immediately after the player's regular ball enters the outhole. The player-up and/or ball in play on the back box are not advanced for extra ball play. Bonus score is added to the player's score before the game serves the extra ball for play.

Scoring over 10,000,000 gives "High Score to Date" award.
At the end of the game, a 'High Score to Date' is alternately flashed with all 4 player scores. If the 'High Score to Date' is beat, this feature* awards free games.

Tilting the game results in loss of a ball. The flippers, thumper-bumpers, etc., go 'dead.' Bonus points are not scored. The purpose of the tilt penalty is to discourage the player from jostling the machine in an attempt to prolong play. Game action becomes normal after the ball kicker assembly serves the ball to the shooter alley.

Slamming the machine results in loss of the game. All feature lights go out, the game goes 'dead,' and a time delay occurs. The purpose of the time delay is to discourage unnecessary abuse of the machine. After the delay, the 'Game Over' light lites and the power-up tune is played. The time delay occurs anytime one of the slam switches is made to contact. There are two factory installed slam switches, on the front door, and one on left side of cabinet. (Any number of slam switches could be installed by the operator, to meet his individual requirement.) The switch should be adjusted to have approximately 1/16" gap between the contacts. The weighted blade should be adjusted to attain the desired sensitivity. Decreasing the gap between contacts will make the switch more sensitive. Opening the gap will reduce sensitivity.

*Some tunes and features can be disabled by operator if so desired. See Back Box Adjustments.

NOTE: Scoring and feature units will differ from game to game.

III. BOOKKEEPING FUNCTIONS

The game is designed to help the operator perform certain accounting functions. The game can display the number of total plays and replays (free games). It can display the number of coins dropped down each coin chute. The bookkeeping functions are displayed on all player score displays simultaneously. An identification number, 05 to 15, appears on the Match/Ball in Play window as follows:

05—	00	to—	40 = Current Credits
*06—	100000	to—	99999 = Total Plays (Payed & Free Games)
*07—	10000	to—	99999 = Total Replays (Free Games)
08—	00	to—	99999 = Game Percentage
09—	00	to—	99999 = Total times 'High Score to Date' is beat
*10—	10000	to—	99999 = Coins Dropped thru Coin Chute #1
*11—	10000	to—	99999 = Coins Dropped thru Coin Chute #2**
*12—	10000	to—	99999 = Coins Dropped thru Coin Chute #3**
*13—	00	to—	99999 = Number of Specials awarded from Panel Specials Only
*14—	00	to—	99999 = Number of minutes of Game Play
*15—	00	to—	99999 = Number of Service Credits

The game displays the first bookkeeping entry if the Self-Test button (See Fig. III) on the inside of the front door is pressed ten times. Alternately push and release the Self-Test button at one second intervals. The number 05 appears in the 'Match/Ball in Play' window. Current credits appear on the player score displays. Each additional press of the button causes the next entry to be displayed.

After the data in each bookkeeping register is recorded, it can be set to zero simply by pressing switch button S33, located on A4, the MPU module in the back box (See Fig. III), or by pressing the Coin Chute #3 switch. Any or all registers can be cleared by alternating between the Self-Test button and the switch button S33 on the MPU module or Coin Chute #3 switch. The operator is given this option as a possible convenience and can elect to use or not use it as his needs direct.

Pressing the button 5 more times causes the game to play the power-up tune and light the Game Over light.

Service credits are designed to allow the serviceman to test the game under actual play conditions without disturbing the bookkeeping records that reside at identification numbers 06, 07, 10, 11 and 12.

To obtain Service Credits, push and release the Self-Test switch until identification number 05 appears in the 'Match/Ball in Play' window. Hold in the Credit button until the desired number of Service Credits (up to five) appears on the player score displays.

NOTE: If, upon accessing identification number 05, a number of credits greater than five is displayed, pressing the credit button has no effect.

Identification number 15 is reserved as a record of the number of Service Credits used.

*The 10,000 level is pre-set at the factory; can be set to zero, initially, if desired.

**If Coin Chute is not used in game, number displayed (if other than 00) on Player Score displays has no significance.

NOTE: If "Total Play" register is reset to zeroes then "Total Replays" register should also be reset to zeroes to maintain the game percentage value.

B.M.X. #1276
FEATURE OPERATION & SCORING

CONTROLLED OUTLANE FEATURE
Player controls outlanes by using extra flipper buttons on side of cabinet. Lanes are operable when lane lites are lit. Lanes stay closed for period of time depending on switch position.

SWITCH #8 OUTLANE TIME
ON: (1) sec OFF: (2) sec

WHEEL (SPROCKET) BONUS FEATURE
The wheel bonus may have up to 12 lites on at one time. 4 for each color. To add a lite to the wheel one must complete the color corresponding target bank.

Example: 1st time green targets completed you lite a green lite.
2nd time green targets completed you collect the green lite and add a 2nd one.
3rd time green targets completed you collect the 2 green lites and add a 3rd one.
4th time green targets completed you collect the 3 green lites and add a 4th one.
5th, 6th, 7th and every additional time green targets completed you collect the 4 green lites. The amber and blue targets work the same way.

Your wheel bonus may also be collected in the top left saucer and outhole at any time. Top saucer collects special when flashing. #16 switch controls the special. ON: More than 1 special per ball. OFF: Only 1 special per ball.

MEMORY BONUS WHEEL FEATURE
The bonus may be advanced to a total of 210,000 this may be recalled or reset from ball to ball. The following switch controls this feature.

SWITCH #24 BONUS RECALL
ON: YES OFF: NO

DOUBLE AND TRIPLE SCORE FEATURE
At the start of each ball, there are two arrows lit by the top two left lanes. To achieve double or triple scores one must enter either lit rollover, prior to any other score. If you do score before this the arrows will go out. You may relite arrows for that ball by hitting the 2X or 3X target when lit. The following switch will determine time limit.

SWITCH #14 2X and 3X LIMIT
ON: (8) sec OFF: (5) sec

Top 6 droptargets score 1,000 each. By completing all 6 targets within a period of time you collect a bonus which is determined by the first droptarget hit. Once you collect all 6 bonuses you are awarded special.

SWITCH #6 RECALL LITES
ON: YES OFF: NO

X-BALL FEATURE
Knocking down top 6 droptargets in time, lites target extra ball arrow for period of time. If hit when lit you collect extra ball. When you start to shoot extra ball, playfield is as you left it except for top (6) droptargets.

SWITCH #7 (X-BALL TIME)
ON: 5 sec OFF: 3 sec

BONUS SPECIAL FEATURE
The bonus special is collected when you have 8 or 12 lites lit in the wheel (sprocket) bonus.

SWITCH #15
ON: AT (8) OFF: AT (12)

CENTER SAUCER TIME FEATURE
1st time scores 1,000
2nd time scores 15,000 + 1,000.
3rd time scores 20,000 + 15,000 + 1,000.
4th time scores SPECIAL, 20,000, 15,000, and 1,000.
(5 second time allowed between steps then resets back to 1,000.)

TOP LEFT RAMP MAGNET
Ball coming thru 10,000 lane activates magnet and depending on ball rolldown speed directs ball away from ramp.

SPECIAL REPLAY/X-BALL/NOVELTY MODES
Self test positions 16 and 17 give the operator flexibility to award a replay ball or score (Novelty) when a special is scored. A combination of X/Ball, Novelty can be obtained through the following chart.

Self test position 16 Playfield X-Balls and Specials	Set to "03" AWARD	Set to "02" AWARD	Set to "01" AWARD
6 Drop Target Special	Replay	X-Ball*	50,000
Wheel Special	Replay	X-Ball*	50,000
Center Saucer Special	Replay	X-Ball*	50,000
6 Drop Target X-Ball	X-BALL	X-BALL	25,000
Self test Position 17	Set to "03" AWARD	Set to "02" AWARD	Set to "01" AWARD
Scoring Thresholds	Replay	X-BALL**	No Award

(*) 50,000 if same player shoot again is lit.
(**) 25,000 if same player shoot again is lit.

V. GAME ADJUSTMENTS

A. Playfield Panel Post Adjustments:

Posts that control left and right outlane opening on panel can be removed to make access to outlanes easier or harder for ball to enter. See Figure II.

Easier entry will decrease playing time and scoring (conservative).
Harder entry will increase playing time and scoring (liberal).

B. Back Box Game Adjustments:

Each game has thirty-two switches located on A4, the MPU module, located in the back box, that allow play to be customized to the location. See Figure III. Credits per coin, maximum credits, credit display, balls per game, match feature, high game feature, special award and melody are selectable by means of the switches. The switches are contained in four-sixteen lead packages numbered S1-8, S9-16, S17-24, and S25-32 for easy identification. The "ON" toggle position is marked on the assembly. **Turn off power before making adjustments.**

Credits/Coin Adjustments:

The credits per coin are selectable by means of S17-S20 for coin chute #2 (Center). The switch settings and resultant credits/coin are as follows:

S20	S19	S18	S17	Credits/Coin
OFF	OFF	OFF	OFF	Same as Coin Chute #1 Settings
OFF	OFF	OFF	ON	1/1 Coin
OFF	OFF	ON	OFF	2/1 Coin
OFF	OFF	ON	ON	3/1 Coin
OFF	ON	OFF	OFF	4/1 Coin
OFF	ON	OFF	ON	5/1 Coin
OFF	ON	ON	OFF	6/1 Coin
OFF	ON	ON	ON	7/1 Coin

S20	S19	S18	S17	Credits/Coin
ON	OFF	OFF	OFF	8/1 Coin
ON	OFF	OFF	ON	9/1 Coin
ON	OFF	ON	OFF	10/1 Coin
ON	OFF	ON	ON	11/1 Coin
ON	ON	OFF	OFF	12/1 Coin
ON	ON	OFF	ON	13/1 Coin
ON	ON	ON	OFF	14/1 Coin
ON	ON	ON	ON	15/1 Coin

The credits given are selectable by means of switches 1-5 incl., for coin chute #1 and switches 9-13 incl., for coin chute #3. Thirty-one different credit ratios are available for each coin chute. The switch settings and resultant credits/coin are listed below.

CREDITS/COIN ADJUSTMENTS

COIN CHUTE	SWITCHES					CREDITS	CREDITS	CREDITS	CREDITS	CREDITS	TOTAL CREDITS/COINS
#1 (HINGE SIDE)	5	4	3	2	1						
OR #3	13	12	11	10	9						
(RIGHT SIDE)	OFF	OFF	OFF	OFF	OFF	1/1 Coin					
	OFF	OFF	OFF	OFF	ON	2/1 Coin					
	OFF	OFF	OFF	ON	OFF	3/1 Coin					
	OFF	OFF	OFF	ON	ON	4/1 Coin					
	OFF	OFF	ON	OFF	OFF	5/1 Coin					
	OFF	OFF	ON	OFF	ON	6/1 Coin					
	OFF	OFF	ON	ON	OFF	7/1 Coin					
	OFF	OFF	ON	ON	ON	8/1 Coin					
	OFF	ON	OFF	OFF	OFF	9/1 Coin					
	OFF	ON	OFF	OFF	ON	12/1 Coin					
	OFF	ON	OFF	ON	OFF	14/1 Coin					
	OFF	ON	OFF	ON	ON	1/2 Coins*					
	OFF	ON	ON	OFF	OFF	2/2 Coins*					
	OFF	ON	ON	OFF	ON	3/2 Coins*					
	OFF	ON	ON	ON	OFF	4/2 Coins*					
	OFF	ON	ON	ON	ON	5/2 Coins*					
	ON	OFF	OFF	OFF	OFF	6/2 Coins*					
	ON	OFF	OFF	OFF	ON	7/2 Coins*					
	ON	OFF	OFF	ON	OFF	8/2 Coins*					
	ON	OFF	OFF	ON	ON	9/2 Coins*					
	ON	OFF	ON	OFF	OFF	12/2 Coins*					
	ON	OFF	ON	OFF	ON	14/2 Coins*					
	ON	OFF	ON	ON	OFF	1/1st Coin	2/2nd Coin				3/2
	ON	OFF	ON	ON	ON	0/1st Coin*	1/2nd Coin	1/3rd Coin	1/4th Coin		3/4
	ON	ON	OFF	OFF	OFF	0/1st Coin*	1/2nd Coin	0/3rd Coin**	2/4th Coin		3/4
	ON	ON	OFF	OFF	ON	1/1st Coin	1/2nd Coin	1/3rd Coin	2/4th Coin		5/4
	ON	ON	OFF	ON	OFF	1/1st Coin	2/2nd Coin	1/3rd Coin	3/4th Coin		7/4
	ON	ON	OFF	ON	ON	1/1st Coin	2/2nd Coin	2/3rd Coin	2/4th Coin		7/4
	ON	ON	ON	OFF	OFF	0/1st Coin***	0/2nd Coin***	1/3rd Coin			1/3
	ON	ON	ON	OFF	ON	0/1st Coin**	0/2nd Coin**	0/3rd Coin**	1/4th Coin		1/4
	ON	ON	ON	ON	OFF	0/1st Coin****	0/2nd Coin****	0/3rd Coin****	0/4th Coin****	1/5th Coin	1/5
	ON	ON	ON	ON	ON	0/1st Coin***	0/2nd Coin***	1/3rd Coin	0/4th Coin****	1/5th Coin	2/5

*No Credits until 2nd coin is dropped.
**No Credits until 4th coin is dropped.
***No Credits until 3rd coin is dropped.
****No Credits until 5th coin is dropped.

MAXIMUM CREDITS:
The maximum credits accepted by the machine limits the number of games that can be accumulated by coining, by winning replays or both. The maximum number of credits is selectable by means of switches 25 and 26. Four credit limits are available. Switch settings are listed below.

MAXIMUM CREDITS	SWITCHES 26	25
10	OFF	OFF
15	OFF	ON
25	ON	OFF
40	ON	ON

BALLS PER GAME:

# BALLS/GAME	SWITCHES	32	31
5		OFF	ON
4		ON	OFF
3		OFF	OFF
2		ON	ON

MATCH FEATURE:
When the Match Feature is ON, a random number appears on the Match/Credit window and the word Match is illuminated. If the number matches the tens digit in a player's score, a free game is awarded. The Match Feature creates an incentive to play.

MATCH	SWITCH 28
ON	ON
OFF	OFF

CREDIT DISPLAY:

CREDITS DISPLAYED	SWITCH 27
YES	ON
NO	OFF

HIGH SCORE FEATURE:
The game is designed to award an Extra Ball or Free Game at each of the two or three score levels. See Front Door Game Adjustments.

AWARD	SELF-TEST POSITION 16	SELF-TEST POSITION 17
REPLAY	SET TO "03"	SET TO "03"
EXTRA BALL	SET TO "02"	SET TO "02"
NOVELTY	SET TO "01"	SET TO "01"
NO AWARD	SET TO "00"	SET TO "00"

For combinations of replay/X-ball/Novelty Modes see page 4A "K. Special Replay/X-ball/Novelty Modes."

HIGH SCORE TO DATE OR OVER 10,000,000 SCORE FEATURE:
The game is designed to award free games as an option if high score to date is beat or player exceeds 10,000,000 points. Each time this happens, the winning score becomes the new high score to beat. This score is displayed on all 2 player score displays at the end of each game as an incentive to play. Recommended setting is underlined.

HIGH SCORE TO DATE FEATURE	SELF-TEST POSITION 19
No Award	SET TO "00"
One Credit	SET TO "01"
Two Credits	SET TO "02"
<u>Three Credits</u>	SET TO "03"

State and local laws may regulate the use of the above features, and they have been designed to allow for appropriate adjustment in order to conform to such requirements.

SOUND OPTION

The game is designed to make several tones and noises to announce power-up, game-up etc. The tones are intended to attract attention to the game and increase game usage. The tones are controlled by pressing Self-Test button until the #18 shows on the match/credit in display. Now pulse replay button to desired sound setting.

Settings "00", "01"
Most switches associated chimes without feature background.

Setting "02"
Most scoring will have noise effect without background.

Setting "03"
Most all scoring will have a noise effect with background.

NOTE: To correct clarities of sound, adjust controls as follows:

- Turn remote volume control on front door all the way up.
- Turn the sound volume control full clockwise, then turn counterclockwise until sound is not garbled.
- Then adjust remote volume control to desired volume level.

GAME FEATURE OPTIONS

6 Drop target lites recall adjustment:

Liberal	SW.6 ON	Any lites on will come on for next ball.
Conservative	SW.6 OFF	Any lites on will not come on for next ball.

6 Drop target extra ball arrow lite time adjustment:

Liberal	SW.7 ON	Arrow lite goes out after 5 seconds.
Conservative	SW.7 OFF	Arrow lite goes out after 3 seconds.

Outlanes flap rollover button lite time adjustment:

Liberal	SW.8 ON	After flaps deenergize rollover buttons lite after 1 second.
Conservative	SW.8 OFF	After flaps deenergize rollover buttons lite after 2 seconds.

2X, 3X targets flashing lites time adjustment:

Liberal	SW.14 ON	Lites will flash for 8 seconds.
Conservative	SW.14 OFF	Lites will flash for 5 seconds.

Wheel special lite adjustment:

Liberal	SW.15 ON	Special lites after 8th wheel lite is lit.
Conservative	SW.15 OFF	Special lites after 11 wheel lites are lit.

Top saucer special collect adjustment:

Liberal	SW.16 ON	More than 1 special can be collected per ball.
Conservative	SW.16 OFF	Only 1 special can be collected per ball.

Wheel lites recall adjustment:

Liberal	SW.24 ON	Any wheel lites on will come on for next ball.
Conservative	SW.24 OFF	Any wheel lites on will not come on for next ball.

Number of games replays per game adjustment:

Liberal	SW.29 ON	All replays earned will be collected.
Conservative	SW.29 OFF	Only 1 replay per player per game.

C. FRONT DOOR GAME ADJUSTMENTS

High Score Feature Adjustments:

The game is designed to award an extra ball (option) or a free game at each of three score levels. The recommended levels are on the score card in the game.

Any level from 10,000 to 9,990,000 can be set, as desired. It is also possible to reset or turn off (00) any or all of the levels, if desired.

1. Push and release Self-Test button (See Figure III) at one second intervals approximately six times or until identification number 01 appears on the 'Match/Ball in Play' display.

2. The number on the Player Score Displays is the score level.* It can be increased, if desired, by holding the credit button in. To decrease the score level, hold the credit button in and depress and release the Self-Test button. Release the credit button when the desired number appears. Note that the level changes 10,000 points at a time. If the number '00' is left on the displays, the high score feature is eliminated for that level.

3. Repeat steps 1 and 2 for the second and third score levels. The identification numbers '02' and '03' on the Match/Ball in Play display are for the second and third levels, respectively.

High Score to Date and 10,000,000 Feature:

The game is designed to award free games when 'High Score to Date' is beat, or if the player exceeds 10,000,000 points.

It is recommended that the level, which will build with play, be periodically reset to the factory recommended level to encourage game play. The adjustment procedure is the same as for the High Score Feature Adjustment, Steps 1 and 2. Continue pushing the Self-Test button until the identification number '04' appears on the 'Match/Ball in Play' display and then do Step 2.

Any level from '00' to 9,990,000 can be set as described. It is to be noted that '00' does NOT turn off the feature, as it does on High Score feature. The feature is turned off by self test position 19 as discussed under 'Black Box Game Adjustments.'

SELF TEST SETUP FOR 16-19:

To set up positions 16-19 push and release self test button till 16 shows on match/ball in play. Now pulse replay button for recommended setup from "00" thru "03." Repeat for positions 17, 18 or 19.

SOUND

In addition to game sounds, there is also a Master Volume Control located on the front door. (refer to page 10)

Please note that these module volume controls should be adjusted prior to setting the control on the front door.

*Can be quickly set to '00' by pressing S33 on the MPU assembly in the back box or Coin Chute switch #3. (See Figure III.)

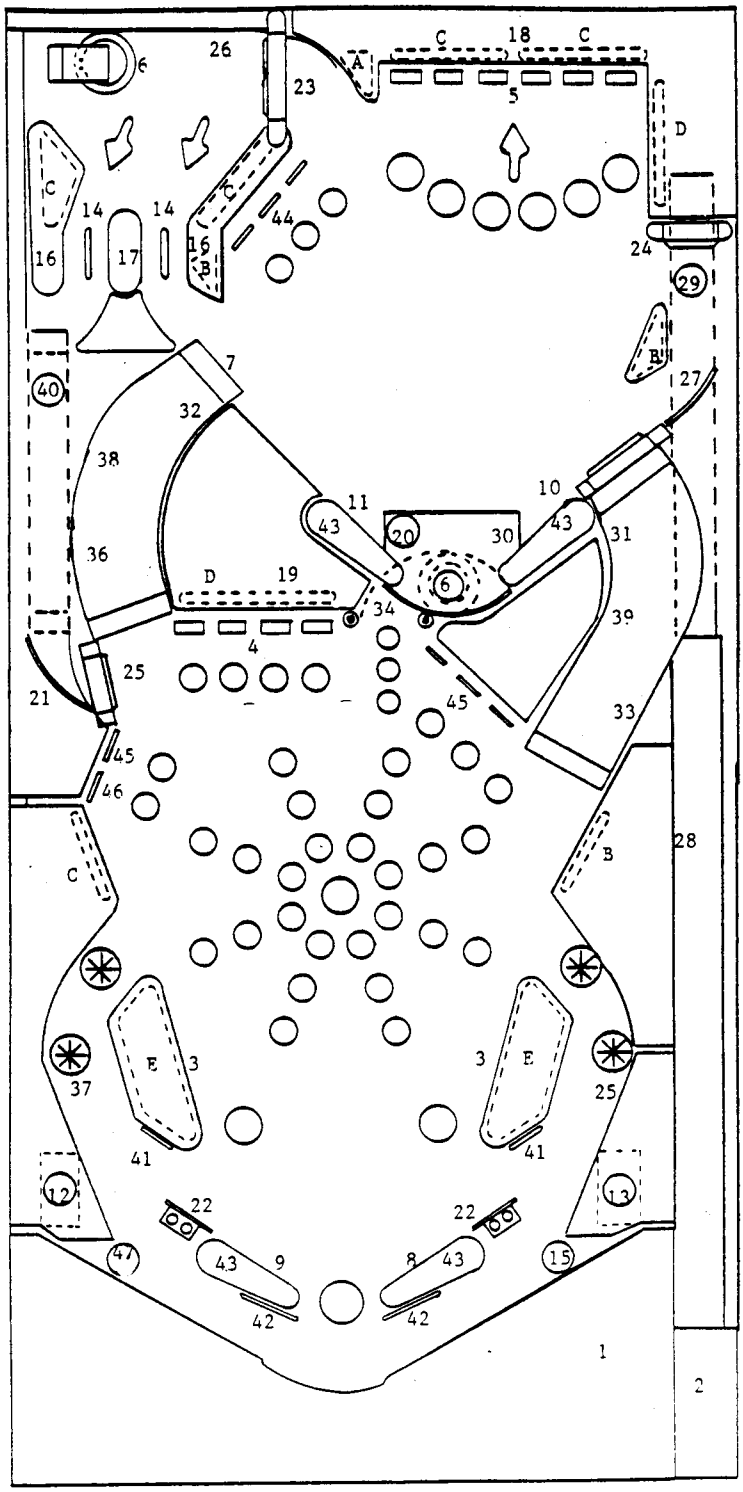

BMX #1276
RUBBER PARTS

A.	R-521	3/4" DIA.	(1)
B.	R-521-1	1" DIA.	(3)
C.	R-521-2	1 1/2" DIA.	(5)
D.	R-521-3	2" DIA.	(2)
E.	R-521-4	2 1/2" DIA.	(2)
F.	R-533-3	FLIPPER	(4)
G.	R-243	5/16 DIA.	(1)

PANEL PARTS

1. BOTTOM ARCH	P-5871-97
2. SHOOTER GAUGE	P-6359-58
3. SLINGSHOT ASS'Y	ASE-2593-6 (2)
4. DROP TARGET ASS'Y (4)	ASE-2795-62
5. DROP TARGET ASS'Y (6)	ASE-2795-63
6. EJECT HOLE ASS'Y	ASE-428-38 (2)
7. COIL (MAGNET)	E-184-283
8. FLIPPER ASS'Y (R)	ASE-1587-111
9. FLIPPER ASS'Y (L)	ASE-1587-112
10. FLIPPER ASS'Y (R)	ASE-1587-117
11. FLIPPER ASS'Y (L)	ASE-1587-118
12. FLIPPER ASS'Y (L)	ASE-1587-139
13. FLIPPER ASS'Y (R)	ASE-1587-140
14. WIRE ACTUATOR ASS'Y	ASE-2806 (2)
15. FLIPPER ARM & SHAFT ASS'Y (R)	A-2747-13
16. GUIDE RAIL	C-694-11 (2)
17. GUIDE RAIL	C-693-11
18. DROP TARGET SHIELD	P-6244-174
19. DROP TARGET SHIELD	P-6244-175
20. BALL GUIDE ASS'Y	A-3032-123
21. BALL GUIDE ASS'Y	A-3032-121
22. BALL GUIDE ASS'Y	A-3032-122 (2)
23. BALL GATE & WIRE ASS'Y	ASE-2250-113
24. BALL GATE & WIRE ASS'Y	ASE-2250-114
25. BALL GATE & WIRE ASS'Y	ASE-2250-115
26. BALL GUIDE ASS'Y	A-3032-126
27. BALL GUIDE ASS'Y	A-3032-127
28. BALL GUIDE ASS'Y	A-3032-133
29. RAMP	A-4102
30. EJECT HOLE COVER ASS'Y	ASE-3231
31. BALL GUIDE ASS'Y	A-3032-129
32. BALL GUIDE ASS'Y	A-3032-130
33. BALL GUIDE ASS'Y	A-3032-131
34. BALL GUIDE ASS'Y	A-3032-128
35. BALL GUIDE ASS'Y	A-3032-125
36. BALL GUIDE ASS'Y	A-3032-132
37. BALL GUIDE ASS'Y	A-3032-124
38. RAMP	P-8155-17
39. RAMP	P-8155-16
40. RAMP	P-8155-15
41. BALL GUIDE WIRE	M-121-32 (4)
42. BUFFER WIRE	M-121-53 (2)
43. FLIPPER (WHITE)	A-3994-5 (4)
44. TARGET SWITCH (G)	A-3359-24 (3)
45. TARGET SWITCH (Y)	A-3359-20 (4)
46. TARGET SWITCH (W)	A-3359-19
47. FLIPPER ARM & SHAFT ASS'Y (L)	A-2747-14

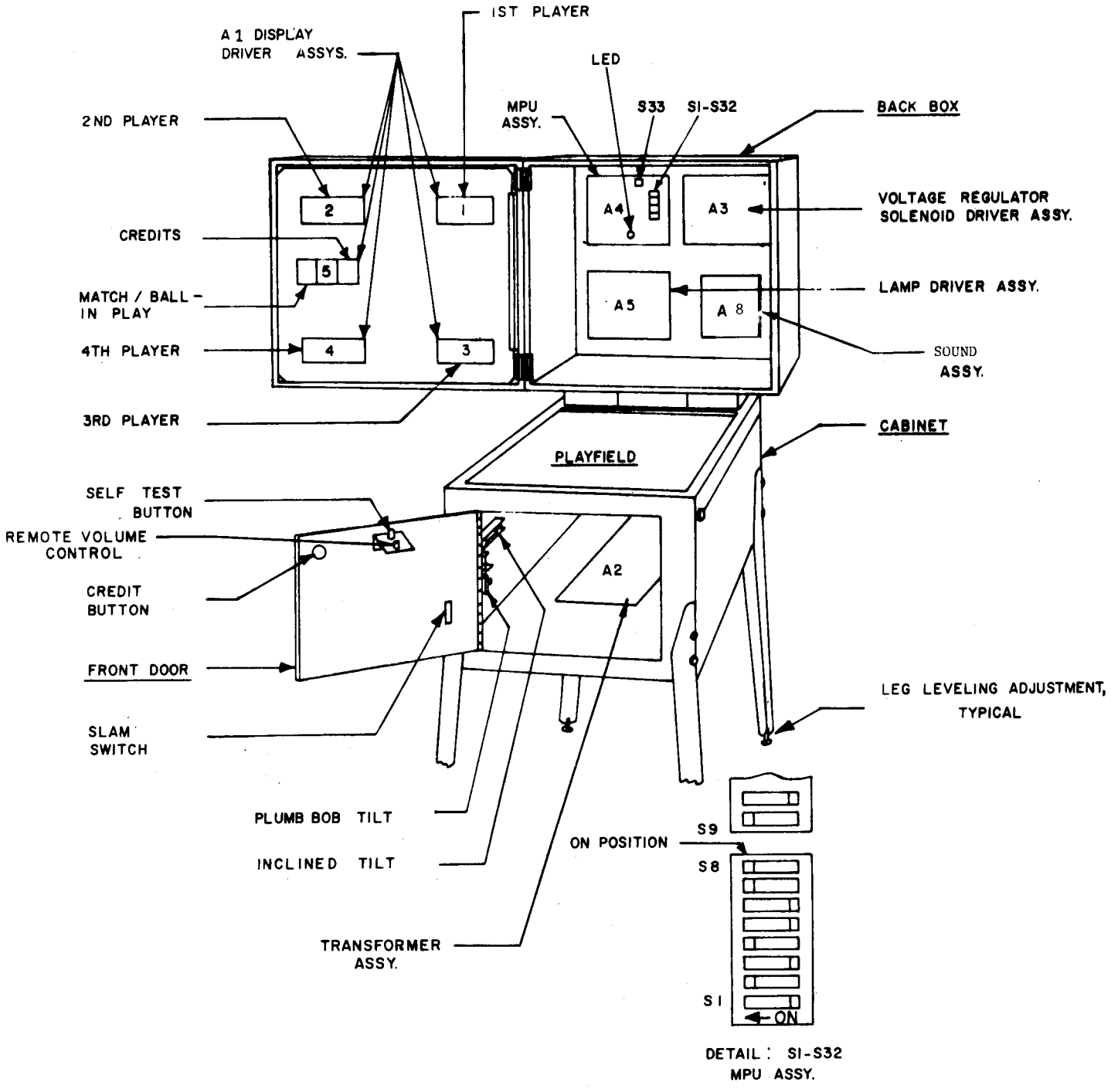

FIGURE III. ELECTRONIC PIN BALL MACHINE

RECOMMENDED

Instructions, Score Cards and High Score Feature Settings
to be used on BMX #1276

3-BALL

REPLAYS

Instruction Card	M-1508-109-E
Score Card	M-1508-109-B W/V-1

1 Replay at 1,000,000
1 Replay at 1,800,000

5-BALL

REPLAYS

Instruction Card	M-1508-109-E
Score Card	M-1508-109-A W/FF-1

1 Replay at 1,200,000
1 Replay at 2,000,000

EXTRA BALL

Instruction Card	M-1508-109-F
Score Card	M-1508-109-A W/OO-1

1 Extra Ball at 1;100,000
1 Extra Ball at 2,000,000

ADDITIONAL CARDS

REPLAYS

M-1508-H-1	400,000	900,000
M-1508-I-1	450,000	1,000,000
M-1508-J-1	500,000	1,000,000
M-1508-K-1	500,000	1,100,000
M-1508-L-1	550,000	1,100,000
M-1508-M-1	600,000	1,100,000
M-1508-N-1	650,000	1,200,000
M-1508-O-1	700,000	1,200,000
M-1508-P-1	700,000	1,400,000
M-1508-Q-1	800,000	1,400,000
M-1508-R-1	900,000	1,400,000
M-1508-S-1	900,000	1,500,000
M-1508-T-1	1,000,000	1,500,000
M-1508-U-1	1,000,000	1,600,000
M-1508-V-1	1,000,000	1,800,000
M-1508-W-1	1,000,000	2,000,000
M-1508-X-1	1,100,000	1,800,000
M-1508-Y-1	1,100,000	2,000,000
M-1508-FF-1	1,200,000	2,000,000
M-1508-GG-1	1,300,000	2,000,000
M-1508-HH-1	1,400,000	2,100,000
M-1508-II-1	1,400,000	2,200,000
M-1508-JJ-1	1,400,000	2,300,000
M-1508-KK-1	1,400,000	2,400,000
M-1508-LL-1	1,500,000	2,500,000
M-1508-MM-1	1,600,000	2,600,000

EXTRA BALL

M-1508-NN-1	1,000,000	1,800,000
M-1508-OO-1	1,100,000	2,000,000
M-1508-PP-1	1,200,000	2,200,000
M-1508-QQ-1	1,400,000	2,400,000

Instruction Card, Novelty
M-1508-109-G
M-1508-109-G-1

M-1508-109-E-1 Replay
M-1508-109-E-1 **Extra Ball**

BLANKS (3)

High game to date recommended levels;
(reset periodically)
3 BALL 2,000,000
5 BALL 2,200,000

#1276 B.M.X.
RECOMMENDED SETTINGS

RECOMMENDED REPLAY GAME SETTING FOR:		3-BALL	5-BALL
6 DROP TARGET LITES RECALL	SW.6	ON	OFF
6 DROP TARGET EXTRA BALL ARROW LITE TIME	SW.7	OFF	OFF
OUTLANES FLAP ROLLOVER BUTTON LITE TIME	SW.8	ON	OFF
2X, 3X TARGETS FLASHING LITE TIME	SW.14	ON	ON
WHEEL SPECIAL LITE	SW.15	OFF	OFF
TOP SAUCER SPECIAL COLLECT	SW.16	ON	OFF
WHEEL LITES RECALL	SW.24	ON	ON
NUMBER OF GAMES REPLAYS PER GAME	SW.29	ON	ON
BALLS PER GAME	SW.31	OFF	ON
BALLS PER GAME	SW.32	OFF	OFF

REPLAYS	3-BALL	5-BALL
Instruction Card	M-1508-109-E	M-1508-109-E
Score Cards	M-1508-109-B W/V-1	M-1508-109-A W/FF-1
Major Mode	Self Test Position 16, 17 Set to "03"	Self Test Position 16, 17 Set to "03"
Match	SW.28 ON	SW.28 ON
High Score to Date	Self Test Position 19 Set to "03"	Self Test Position 19 Set to "03"

X-BALL		
Instruction Card		M-1508-109-E
Score Card		M-1508-109-A W/OO-1
Major Mode		Self Test Position 16, 17 Set to "02"
Match		SW.28 OFF
High Score to Date		Self Test Position 19 Set to "00"

NOVELTY		
Instruction Card	M-1508-109-G	M-1508-109-G
Major Mode	Self Test Position 16, 17 Set to "01"	Self Test Position 16, 17 Set to "01"
Match	SW.28 OFF	SW.28 OFF
High Score to Date	Self Test Position 19 Set to "00"	Self Test Position 19 Set to "00"

VIII. ROUTINE MAINTENANCE ON LOCATION:

Self-Test routines are written into the game design. They are particularly useful for routine maintenance. The tests are described below. The first test is automatic and occurs on power-up. This test causes the MPU module A4 to examine itself for failures. Seven flashes of an LED indicates proper operation. The second series of self-diagnostic tests causes the MPU to 'exercise' each of the other modules in such a way as to make their faults, if any, obvious. See Figure III and Page ii.

It is recommended that these tests be used several times a week to check out the games before play. If faults are discovered, they may be corrected on location if the operator has a stock of replacement modules. See "Trouble Shooting on Location."

MPU Module Self-Test:

At power on, the LED on the MPU module flashes once. (Flicker-Flash.) After a pause, it flashes six more times and goes out. A power-up tune is played to announce game readiness. This indicates proper MPU operating condition and successful completion of the power-up test.

Game Self-Diagnostic Tests:

1. Pressing the Self-Test button inside the door initiates the Self-Test routine. See Figures III and IV. All switched lamps flash off and on continuously.

2. Pressing the Self-Test button again causes each digit on each display to cycle from 0 thru 9, and repeat continuously.

3. Pressing the Self-Test button again causes each solenoid to be energized, one at a time, in a continuous sequence. Hold both flipper buttons 'in' during this test. The number appearing on the Player Score displays is the same as the number assigned to the solenoid. The sound of a solenoid pulling-in as a number appears indicates proper operation. The absence of sound is improper. If sound is absent, see Page 17 for help in Solenoid identification.

4. Pressing Self-Test button again causes the sound module to play same tune repeatedly.

5. Pressing the Self-Test button again causes the MPU to search each switch assembly for stuck contacts. If any are found, the number of the first set encountered is flashed on the Player Score displays. The number remains until the fault is cleared. See Page 17 for help in Stuck Switch identification. Other numbers may follow if more stuck contacts are present. If there are no stuck switches, the Match/Ball in Play display flashes '0'.

6. Pressing the Self-Test button 20 more times causes the MPU to step thru the threshold and bookkeeping functions described previously and finally to repeat the power-up test. For more rapid exit to power-up, turn the game off, then on. The game is now ready to play.

After successful completion of the Self Diagnostic Test procedure, set the game up for play. Exercise each rollover, thumper-bumper, slingshot, etc., by hand until each switch assembly on the playfield has been checked for proper operation. If actuating a switch assembly results in intermittent or no response, clean contacts by gently closing them on a clean business card or piece of paper and wiping until they wipe clean. Regap, if necessary, to 1/16". **Do not burnish or file Gold Plated Switch Contacts.**

IX. TROUBLESHOOTING ON LOCATION

The game is designed to make troubleshooting easy. Several simple procedures are given herein that cover the greatest percentage of game failures. They are written for an operator on location and require module replacement. (See Figure III) Symptoms and the action to be taken are given for each type of problem.

If the problem is more complicated and is not solved by following this procedure, more detailed procedures are available from Bally. See the Parts List for ordering information.

FIGURE IV SELF DIAGNOSTIC TEST

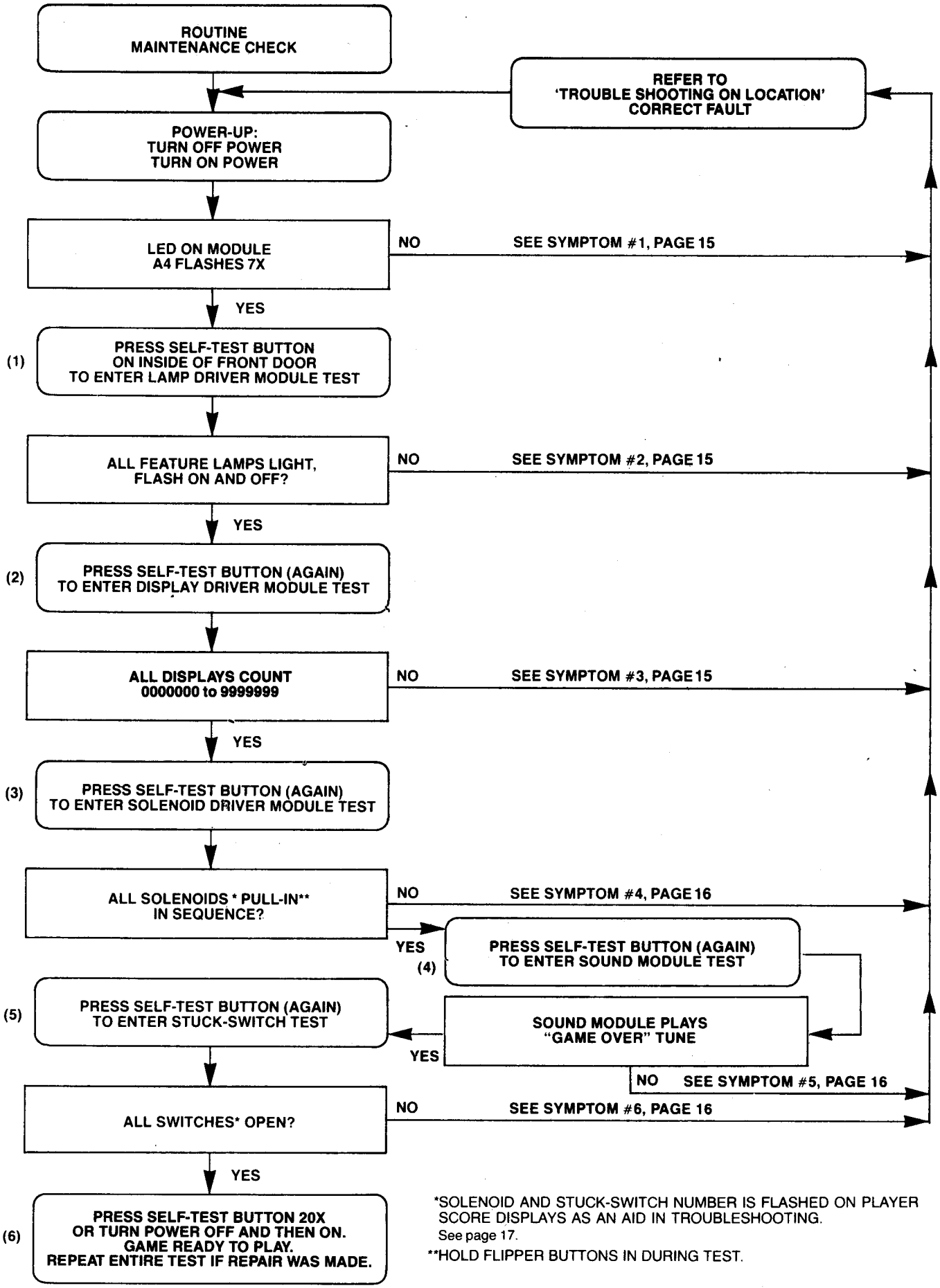

*SOLENOID AND STUCK-SWITCH NUMBER IS FLASHED ON PLAYER SCORE DISPLAYS AS AN AID IN TROUBLESHOOTING.
See page 17.

**HOLD FLIPPER BUTTONS IN DURING TEST.

1A) **SYMPTOM:** Game does not play power-up tune when power is turned on. General Illumination is present.

ACTION: **A)** Turn power OFF. Open back box. Locate light emitting diode (LED) on MPU module A4.

B) Turn Power ON. LED must flash 7X to indicate that module A4 is good. Correct flash sequence is flicker/flash-pause-and then six more flashes and LED goes out.

C. If LED does not come on, or does not flash, or flashes, but less than 7X, turn off power. Replace MPU module A4.

CAUTION: **Replacement MPU Module must have same Part Number or incorrect operation will result! See Parts List for MPU Module Part Number.**

Turn power ON.

D) If game is correct, it is now ready for play. If game is not correct, refer to Module Replacement procedure. (See Parts List.)

2A) **SYMPTOM:** Not all feature lamps light during game play.

ACTION: **A)** With power ON, open front door. Press button (Self-Test switch) once. If the game is correct, **all** feature lamps flash ON and OFF.

B) Carefully raise playfield or open back box to gain access to lamps.

C) Replace bulbs that do not flash.

D) If game is correct, it is now ready for play.

E) If game is not correct, turn power OFF. Replace Lamp Driver Module A5. Turn power ON and repeat A.

F) If game is correct, if is now ready for play.*

G) If game is not correct, turn power OFF. Replace MPU module A4. See CAUTION, 1C. Turn power ON and repeat A.

H) If game is correct, it is now ready for play.* If game is not correct, refer to Module Replacement procedure. (See Parts List.)

2B) **SYMPTOM:** One or some switched lamps always ON.

ACTION: Repeat 2AA, AB, AE, and AF and, if necessary AG & AH.

3A) **SYMPTOM:** Display digits improper on **one** or **several,** but less than all Display Driver module(s), A1. Improper: One or several segments always OFF, digits mottled or several segments or digit(s) always ON.

ACTION: **A)** With power ON, open front door. Press button (Self-Test switch) twice. If the game is correct, each digit on each Display Driver Module A1 (5 used/game) displays the count 1-9 and 0 continuously in all 6 digit positions. Note defective Display Driver modules.

B) Turn power OFF.

CAUTION: High Voltage is supplied to the Display Driver Modules, A1, from the Solenoid Driver/Voltage Regulator Module A3. Wait 30 seconds for High Voltage to Bleed Off.

C) Replace Display Driver module(s) A1. Turn power ON. Repeat A.

D) If game is correct, it is now ready to play.* If game is not correct, refer to Module Replacement procedure. (See Parts List.)

3B) **SYMPTOM:** **All** displays improper (all five display Driver modules). Improper: Digit(s) always on or off/segment(s) always on or off, all displays.

ACTION: **A)** Repeat 3AA, and AB.

B) Replace MPU module A4. See CAUTION NOTE, 1C. Turn power ON. Repeat A.

C) If game is correct, it is now ready to play.* If game is not correct, refer to Module Replacement procedure. (See Parts List.)

3C) **SYMPTON:** One or several displays always off.

ACTION: **A)** Do 3AA, AB, AC, and AD.

B) Repeat 3BB and BC, if necessary.

4A) **SYMPTOM:** Solenoid(s) do(es) not pull-in during course of game.

ACTION: **A)** With power ON, open front door. Press button (Self-Test switch) three times.

B) If game was correct, each solenoid would be energized. A number is flashed on the Player Score displays as each solenoid is pulsed. Note any numbers that do not have the sound of a solenoid associated. See Solenoid Identification Table, Page 17 and Figure V.

C) Carefully lift the playfield (or open the back box) to gain access to the solenoid. Turn power OFF. Inspect the solenoid.

D) If a lead is broken off, repair. Repeat A & B. If game is correct, it is now ready for play.* If solenoid wiring was correct, turn power OFF.

E) Replace Solenoid Driver/Voltage Regulator module A3. See CAUTION NOTE 3AB.

F) Repeat AA & AB. If game is correct, it is now ready to play.* If game is not correct, turn power OFF.

G) Replace Sound Module A8.

H) Repeat AA and AB if game is correct. It is now ready to play. If game is not correct, turn power OFF."

I) Replace MPU module A4. See CAUTION NOTE, 1C.

J) Repeat A & B. If game is correct, it is now ready to play.* If game is not correct, refer to Module Replacement Procedure. (See Parts List.)

4B) **SYMPTOM:** Solenoid(s) always energized—Note: if impulse solenoids (ball ejects, slingshots, thumper-bumpers, etc.) are energized continuously, they are subject to damage. Limit troubleshooting to one minute with power ON, followed by **five minutes with power OFF.** Repeat as necessary. Replace damaged solenoids.

ACTION: Do 4AA, AB, AE, AF, AG, AH and if necessary, AI and AJ.

5) **SYMPTOM:** No Sound.

ACTION: **A)** With Power ON, open front door, press Self-Test switch four times.

B) Turn volume control clockwise to Max.

C) If correct, sound will be heard. If incorrect, try seating speaker lead connector (J2) and input connector (J1).

D) If correct, sound will be heard. If incorrect, refer to Module Replacement procedure."

6) **SYMPTOM:** Feature (Drop Targets, etc.) does not score.

ACTION: **A)** With power ON, open front door. Press button (Self-Test switch) five times.

B) If the game is correct, Match/Credit display would flash '0'. If a number appears on the Player Score displays, see Switch Assembly Identification Table, Page 17 and Figure V.

C) Carefully lift the playfield. Locate the switch assembly identified from the number. Visually inspect the switch assembly. If the contacts are 'stuck', regap them to 1/16". See section under ADJUSTMENTS. Repeat A & B. If the game is correct, it is now ready to play.* If game is not correct, turn the power OFF.

D) Replace MPU module A4. See CAUTION NOTE 1, C.

E) Repeat A & B. If the game is correct, it is now ready to play.* If the game is not correct, refer to Module Replacement Procedure. (See Parts List).

7) **SYMPTOM:** Game blows fuse(s) repeatedly.

ACTION: See Module Replacement Procedure. F.O. 560

*Turn power On-Off switch OFF and then ON.

GAME #1276 BMX

SOLENOID IDENTIFICATION TABLE

Self Test #	SOLENOID IDENTIFICATION	Self Test #	SOLENOID IDENTIFICATION
01	KNOCKER	08	*MAGNET
02	OUTHOLE	09	TOP LEFT SAUCER
03	CENTER SAUCER	10	LEFT OUTLANE FLAP
04	6 DROP TARGET RESET	11	COIN LOCKOUT DOOR
05	4 DROP TARGET RESET	12	K1 RELAY (FLIPPER ENABLE)
06	RIGHT SLINGSHOT	13	RIGHT OUTLANE FLAP
07	LEFT SLINGSHOT		

*HOLD BALL NEAR LEFT TOP RAMP WHEEL CENTER DURING TEST. SWITCH ASSEMBLY SELF-TEST DISPLAY NUMBERS

Switch Self Test #	DESCRIPTION	Switch Self Test #	DESCRIPTION
01	OUTHOLE	21	4 DROP TARGET # 1 (RIGHT)
02		22	4 DROP TARGET # 2
03	TOP LEFT SAUCER	23	4 DROP TARGET # 3
04	CENTER SAUCER	24	4 DROP TARGET #4 (LEFT)
05	RIGHT CABINET BUTTON	25	10K LANE
06	CREDIT BUTTON	26	25K LANE
07	6 DROP TARGET LEFT (F)	27	2 RIGHT ROLLOVER BUTTONS
08	LEFT CABINET BUTTON	28	2 LEFT ROLLOVER BUTTONS
09	COIN III (RIGHT)	29	
10	COIN I (LEFT)	30	LOWER 3 TARGET (RIGHT)
11	COIN II (MIDDLE)	31	LOWER 3 TARGET (MIDDLE)
12	2X TARGET (WHITE)	32	LOWER 3 TARGET (LEFT)
13	3X TARGET (YELLOW)	33	6 DROP TARGET RIGHT (A)
14	REBOUNDS (2) AND BEHIND 4 DROP TARGET	34	6 DROP TARGET (B)
15	TILT (3)	35	6 DROP TARGET (C)
16	SLAM (2)	36	6 DROP TARGET (D)
17	RIGHT SLINGSHOT	37	6 DROPTARGET (E)
18	LEFT SLINGSHOT	38	UPPER 3 TARGET (RIGHT)
19		39	UPPER 3 TARGET (MIDDLE)
20	TARGET BEHIND 6 DROP TARGET	40	UPPER 3 TARGET (LEFT)

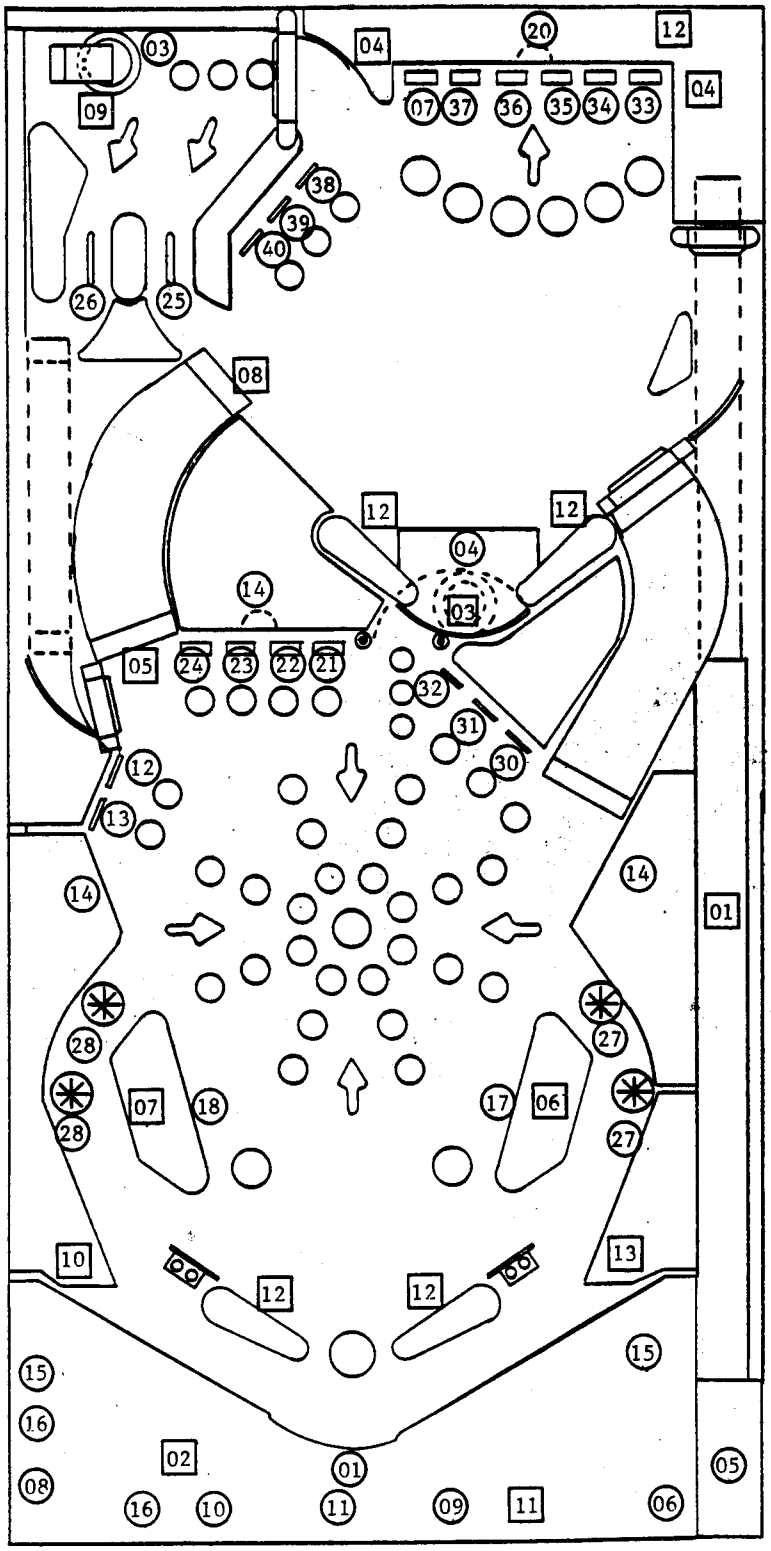

#1276 BMX

○ **INDICATES SWITCH ASSEMBLY IDENTIFICATION NUMBERS**
NOTE: CABINET: 01, 15, 16, 05, 08
DOOR: 06, 09
10, 11, 16

□ **INDICATES SOLENOID IDENTIFICATION NUMBERS**
NOTE: DOOR: 11
BACKBOX: 12
CABINET: 01

ASSEMBLY ADJUSTMENTS:

GENERAL:

All switch assemblies consist of leaf springs, contacts, separators, plastic tubing and screws to hold them to the mounting surface. Before attempting to adjust a switch assembly, make sure that these screws are tight. If not, tighten screw closest to the contact end of the leaf spring first. This will prevent the assembly from being secured in such a manner that the leaf springs tend to fan out. In general, all leaf springs are adjusted for a 1/16″ gap in the open position and .010″ overtravel or wipe in the closed position. All contacts should be in good condition. Unless otherwise instructed, they should be dry or non-lubricated. All contacts should be free of dust and dirt. Contacts, with the exception of the flipper button switch assemblies, are plated to resist corrosion. Filing or burnishing breaks the finish and encourages corrosion. Clean by closing the contacts over a clean piece of paper (e.g. a business card) and wiping gently until the contacts are clean. For the flipper button switch assemblies **ONLY:** Tarnish can be removed with a contact file followed by a burnishing tool. Severely pitted contacts must be replaced as an assembly. In general, contacts need be cleaned or replaced and adjusted only when they are found to be a source of game malfunction.

X. SERVICE PARTS:

A parts catalogue is available upon request. The catalogue is illustrated and lists all replacement parts for each game manufactured by Bally. Requests should be addressed to:

BALLY MANUFACTURING CORPORATION
2640 WEST BELMONT AVENUE
CHICAGO, ILLINOIS 60618
ATTN: PARTS DEPARTMENT

SERVICE HINTS:

The Bally playfield has an improved tuff-coat finish with excellent wearing properties. Its life expectance, as well as play appeal, can be extended by periodic cleaning of the playfield.

DO: Bally recommends you clean your playfield with Wildcat #125 (Wildcat Chemical Co., 1333 W. Seminary Drive, Ft. Worth, Texas 76115). Wildcat #125 is a combination cleaner and polish. Bally has tried and tested this product and found it to be very effective. If Wildcat #125 is not available, Bally suggests you ask your Distributor to order it. Inspect and hand polish the ball in a clean cloth. A chipped ball must be replaced. It can ruin the finish on the playfield in a short period of time.

DON'T: Use water in large quantities, highly caustic cleaners, abrasive cleaners or cleaning pads on the playfield. Do not allow a wax or polish build up. Waxes yellow with age and spoil play appeal.

XI. PARTS LIST

BMX—#1276

MISCELLANEOUS	PART NUMBER
Transformer (Domestic or Export)	E-122-161
Bulbs, #555	E-125-73
Fuse, 1 Amp. 3 AG Slow Blow (Playfield Solenoid Protection)	E-133-44
Fuse, 10 Amp (2) (Playfield Lite Protection)	E-133-10

ASSEMBLY COILS	
Coin Lockout	FO-36-7000
Flipper (3)	AQ-25-500/ 34-4500
Top Left Saucer	AO-29-2100
Center Saucer	AO-27-1300
Knocker	AR-26-1200
Outhole Kicker	AN-26-1200
Sling-Shot (2)	AO-26-1200
Drop Target Reset (3)	NO-26-1900
Outlane Flap (2)	AO-24-2100
Magnet	E-184-283

PLAYFIELD PARTS — See Figure II

MODULES	
Lamp Driver A5	AS-2518-23
Display Driver A1 (1 used)	AS-2518-21
Display Driver A1 (4 used)	AS-2518-58
Solenoid Drive/Voltage Regulator A3	AS-2518-22
MPU A4	AS-2962-38
Transformer & Rectifier A2	AS-2877-6
Rectifier Board (Part of A2)	AS-2518-54
Sound	AS-3022-15
Solenoid Expander	AS-2518-66

REPAIRS PROCEDURES/AIDS	
Module & Component Replacement	F.O. 560-1
AID (Assistance in Diagnostics) Kit, used with F.O. 560-1	KIT #485-1

MODULE COMPONENTS
SEE MODULE PARTS LIST

MODULE COMPONENT STARTER KITS
(Each kit contains an assortment of the most needed electronic parts for use in Module repair.)
KIT #558—For Rectifier Board (Part of A2)
KIT #503—For MPU Board A4 (less Memory U1-U6)
KIT #492—For Solenoid Drive/Voltage Regulator A3
KIT #493—For Display Drive A1
KIT #494—For Lamp Drive A5
KIT #559—For Sound A8

AS-2518-35 MPU MODULE

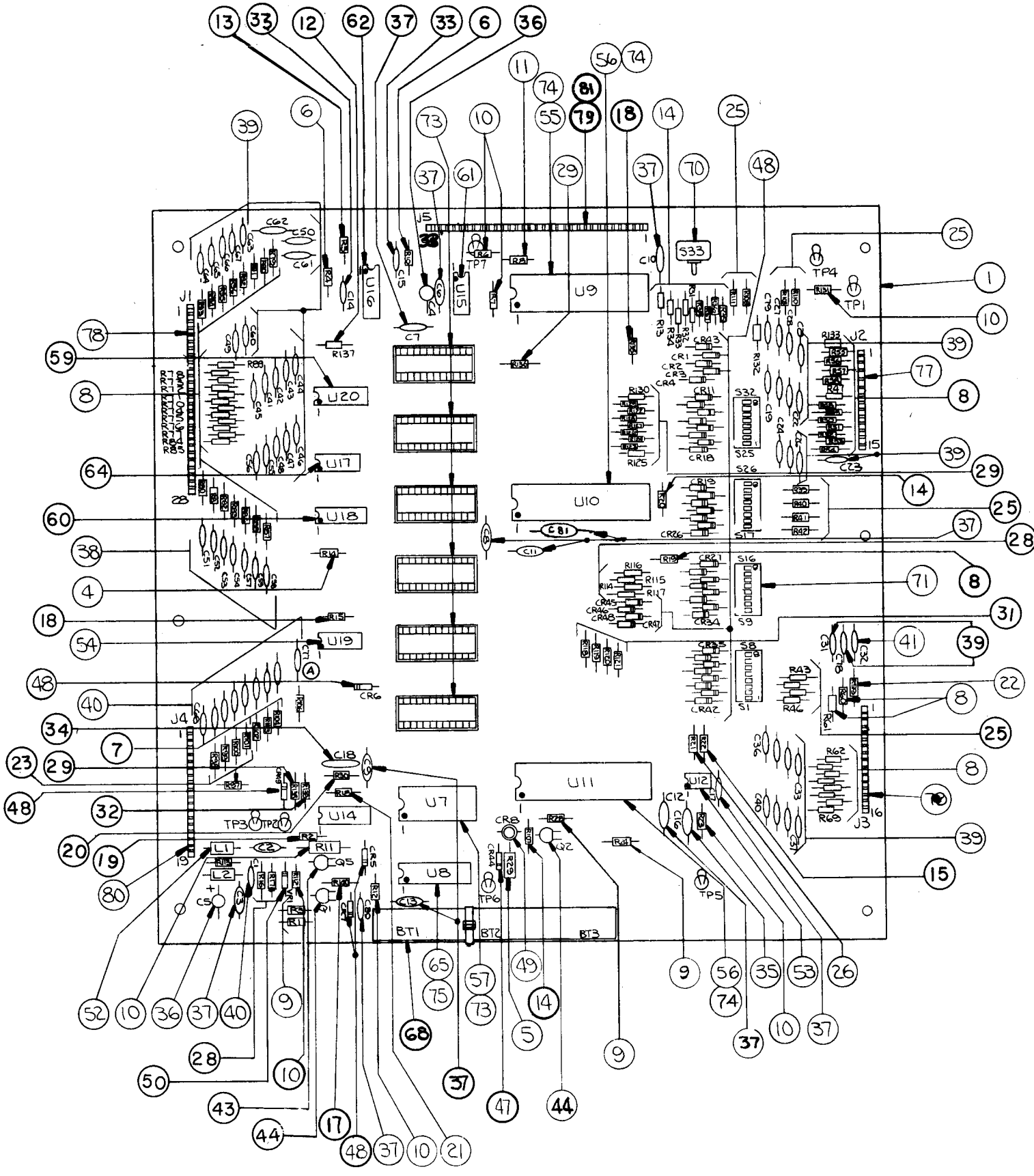

A4: MPU MODULE

COMPONENT PARTS LIST

ITEM	REFERENCE DESIGNATION	BALLY PART #	DESCRIPTION
1	A4 (see note 1)	AS-2962-38	MPU Module Complete.
2	A4 (see note 2)	AS-2518-35	MPU Module less Program Memory, U1-6 incl.
3-32	See Schematic		Resistors, See schematic for value
33	C14, C15	E-00586-0067	Capacitor, 470 PFD, 1kv
34	C18	E-00586-0088	Capacitor, .05 MFD, 16V
35	C16	E-00586-0081	Capacitor, .1 MFD, 100V
36	C4, C5	E-00586-0073	Capacitor, 4.5 MFD, 25V
37	C3, C6-C13, C17, C81	E-00586-0085	Capacitor, .01 MFD, 25V
38	C79, C41-C67	E-00586-0083	Capacitor, 470 PFD, 50V
39	C19-C31, C78, C33-C40	E-00586-0082	Capacitor, 390 PFD, 50V
40	C1, C2, C68-C77	E-00586-0084	Capacitor, 820 PFD, 50V
41	C32	E-00586-0077	Capacitor, 3000 PF, 1 kv
43	Q5	E-00585-0023	Transistor PNP (MPS-3702)
44	Q1, Q2	E-00585-0031	Transistor (2N3904)
47	CR44	E-00587-0006	Diode (IN4004)
48	CR1-CR7, CR11-CR43, CR45-CR49	E-00587-0014	Diode (IN4148)
49	CR8	E-00679	LED (Green)
50	VR1	E-00598-0008	Diode Zener (8.2V, IN9598)
52	L1, L2	E-00604-0003	Inductor, 22 Micro Hy.
53	U12	E-00620-0004	Timer (555)
54	U19	E-00620-0005	Quad 2 Input (4011)
55	U9	E-00620-0028	MPU I.C. (6800)
56	U10, U11	E-00620-0029	PIA I.C. (6820)
57	U7	E-00620-0030	RAM I.C. (6810)
59	U20	E-00620-0032	HEX Buffer I.C. (14502B)
60	U14, U18	E-00620-0033	HEX Inverter (4049B)
61	U15	E-00620-0034	Quad Memory Drive (MC3459L)
62	U16	E-00620-0035	Dual Monostable (9602)
64	U17	E-00620-0041	Quad 2 Inputs (74L00N)
65	U8	E-00620-0042	RAM (C MOS, P5101L-3)
68	BT1, BT2, BT3	E-00628-0003	Battery
70	S33	E-00658-0001	Push Button Switch
7●	S1-S8, S9-S16, S17-S24, S25-S32	E-00677	DIP Switch
73		E-00712	24 Pin Socket
74		E-00712-0001	40 Pin Socket
75		E-00712-0003	22 Pin Socket
77	J2	E-00715	15 Pin Wafer Connector
78	J1	E-00715-0004	28 Pin Wafer Connector
79	J3, J5	E-00715-0017	16 Pin Wafer Connector
80	J4	E-00715-0018	19 Pin Wafer Connector
81	J5	E-00715-0024	17 Pin Wafer Connector

NOTE 1:
When ordering, fill in dash number. For example, AS-2962-0: LOST WORLD, AS-2962-2: SIX MILLION DOLLAR MAN, AS2962-3: PLAYBOY, AS-2962-4: VOLTAN, AS-2962-5: SUPERSONIC, AS-2962-6: STAR TREK, AS-2962-7: KISS, AS-2962-8: PARAGON, AS-2962-9: GROUND SHAKER, AS-2962-10: HARLEM GLOBETROTTERS, AS-2962-12: DOLLY PARTON, AS-2962-13: SILVERBALL MANIA, AS-2962-18: MYSTIC, AS-2962-20: HOTDOGGIN, AS-2962-22: SKATEBALL, AS-2963-23: FRONTIER, AS-2962-21: XENON, AS-2962-24: FLASH GORDON, AS-2962-26: EIGHT BALL DELUXE, AS-2962-25: FIRE-BALL II, AS-2962-28: FATHOM, AS-2962-29: MEDUSA, AS-2962-30: CENTAUR, AS-2962-31: ELEKTRA, AS-2962-32: VECTOR, AS-2962-35: PAC-MAN, AS-2962-37: SPEAKEASY, AS-2962-38: BMX.

NOTE 2: Order replacement memory chips U1-U6, specifying game, socket and part number stamped on chip.

AS-2518-23 LAMP DRIVER MODULE

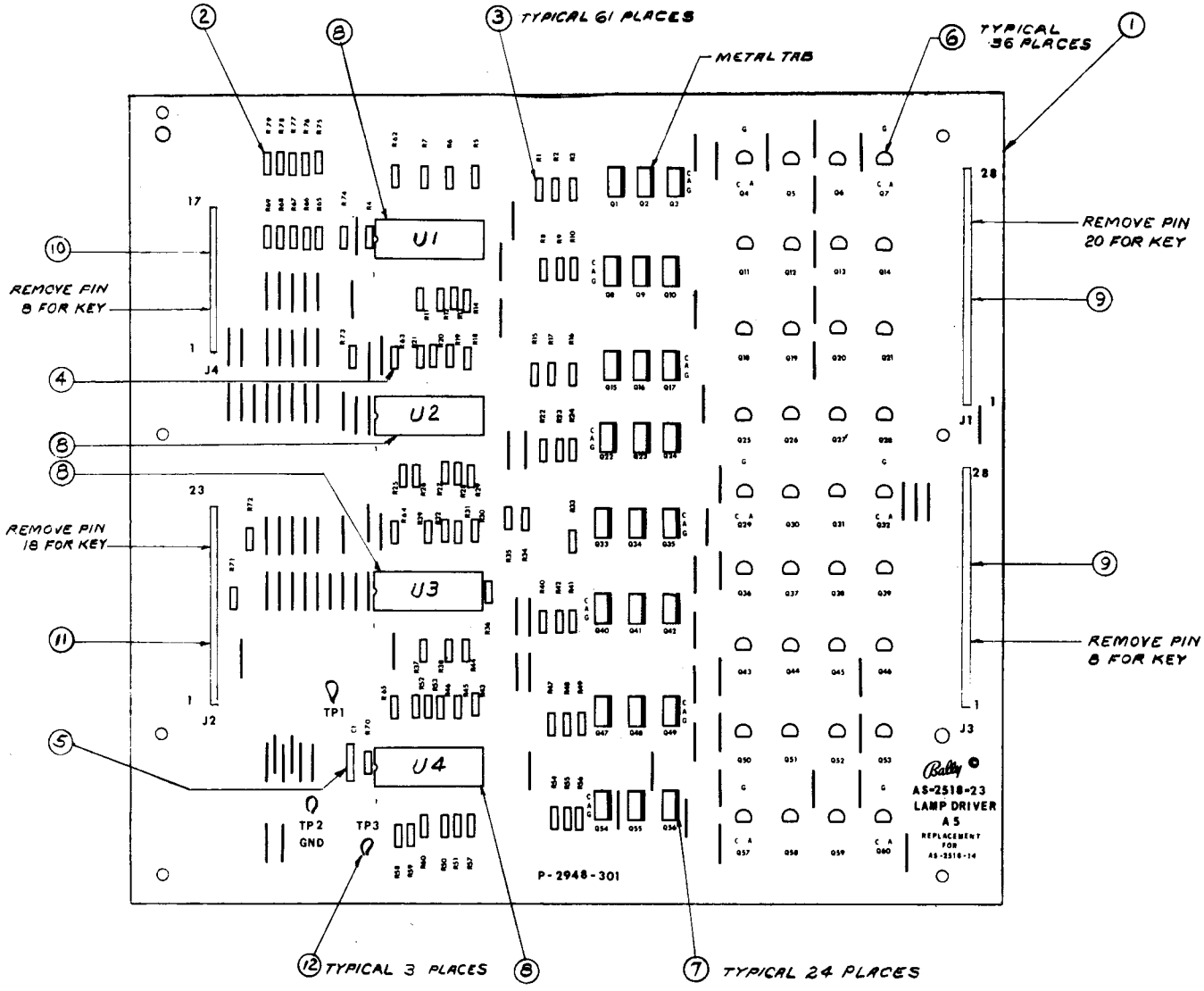

A5: LAMP DRIVER MODULE
COMPONENT PARTS LIST

ITEM	REFERENCE DESIGNATION	BALLY PART #	DESCRIPTION
1	A5	AS-2518-23	Lamp Driver Module, Complete
2	R71-R79	E-00105-242	Resistor, 20kΩ, 5%, ¼ W
3	R1-R60, R70	E-00105-0237	Resistor, 2kΩ, 5%, ¼ W
4	R61-R69	E-00105-0256	Resistor, 2.2MΩ, ¼ W
5	C1	E-00586-0065	Capacitor, .01 MFD, 500V
6	Q4-Q7, Q11-Q14, Q18-Q21, Q25-Q32, Q36-Q39, Q43-Q46, Q50-Q53, Q57-Q60	E-00585-0014	SCR, 2N5060
7	Q1-Q3, Q8-Q10, Q15-Q17, Q22-Q24, Q33-Q35, Q40-Q42, Q47-Q49, Q54-Q56	E-00585-0029	SCR, MCR106-1
8	U1-U4	E-00620-0037	I.C., Decoder, 14514B
9	J1, J3	E-00715-0004	28 Pin Wafer Connector
10	J4	E-00715-0024	17 Pin Wafer Connector
11	J2	E-00715-0014	23 Pin Wafer Connector
12	TP1, TP2, TP3	P-05399	Test Clip

AS-2518-21 CREDIT DISPLAY DRIVER MODULE

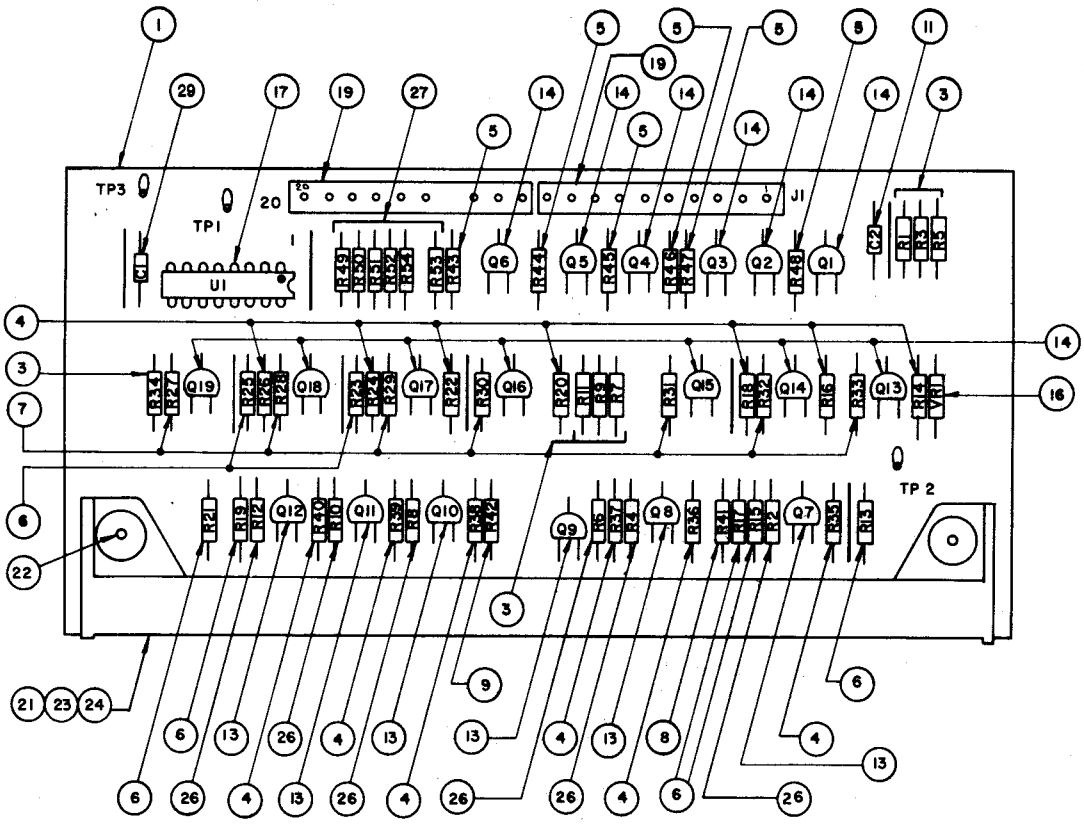

A1: 6 DIGIT DISPLAY DRIVER MODULE
COMPONENT PARTS LIST

ITEM	QTY.	REFERENCE DESIGNATION	BALLY PART #	DESCRIPTION
1	1	A1	AS-2518-21	6 Digit Display Driver, Complete
3	7	R1, R3, R5, R7, R9, R11, R34	E-105-331	Resistor, 100K Ω
4	13	R14, R16, R18, R20, R22, R24, R26, R35, R36, R37, R38, R39, R40	E-105-227	Resistor, 300K Ω
5	6	R43, R44, R45, R46, R47, R48	E-105-228	Resistor, 9.1K Ω
6	7	R13, R15, R17, R19, R21, R23, R25	E-105-229	Resistor, 1.5K Ω
7	7	R27, R28, R29, R30, R31, R32, R33	E-105-222	Resistor, 1.2K Ω
8	1	R41	E-105-231	Resistor, 39K Ω
9	1	R42	E-105-271	Resistor, 240K Ω
10				
11	1	C2	E-586-65	Capacitor, .01 MFD, 500V
13	6	Q7, Q8, Q9, Q10, Q11, Q12	E-585-32	Transistor (2N5401)
14	13	Q1, Q2, Q3, Q4, Q5, Q6, Q13, Q14, Q15, Q16, Q17, Q18, Q19	E-585-33	Transistor (MPS-A42)
16	1	VR1	E-598-7	Zener Diode, 110V
17	1	U1	E-620-38	I.C. Decoder
18				
19	2	J1	E-715-34	10 Pin Wafer Pin Connector
21	1	DS1	E-680	Digital Display Panel
22	2		M-1836	Hi-Lo Screw, W/H
23	1		P-2399	Display Mounting (Top)
24	1		P-2399-1	Display Mounting (Bottom)
26	6	R2, R4, R6, R8, R10, R12	E-105-287	Resistor, 2.2K Ω
27	6	R49, R50, R51, R52, R53, R54	E-105-242	Resistor, 20K Ω
28	As Req'd			Wire Jumper
29	1	C1	E-586-85	Capacitor, .01 MFD, 25V

NOTE: INTERCHANGEABLE WITH AS-2518-15

AS-2518-22 SOLENOID DRIVER/VOLTAGE REGULATOR MODULE

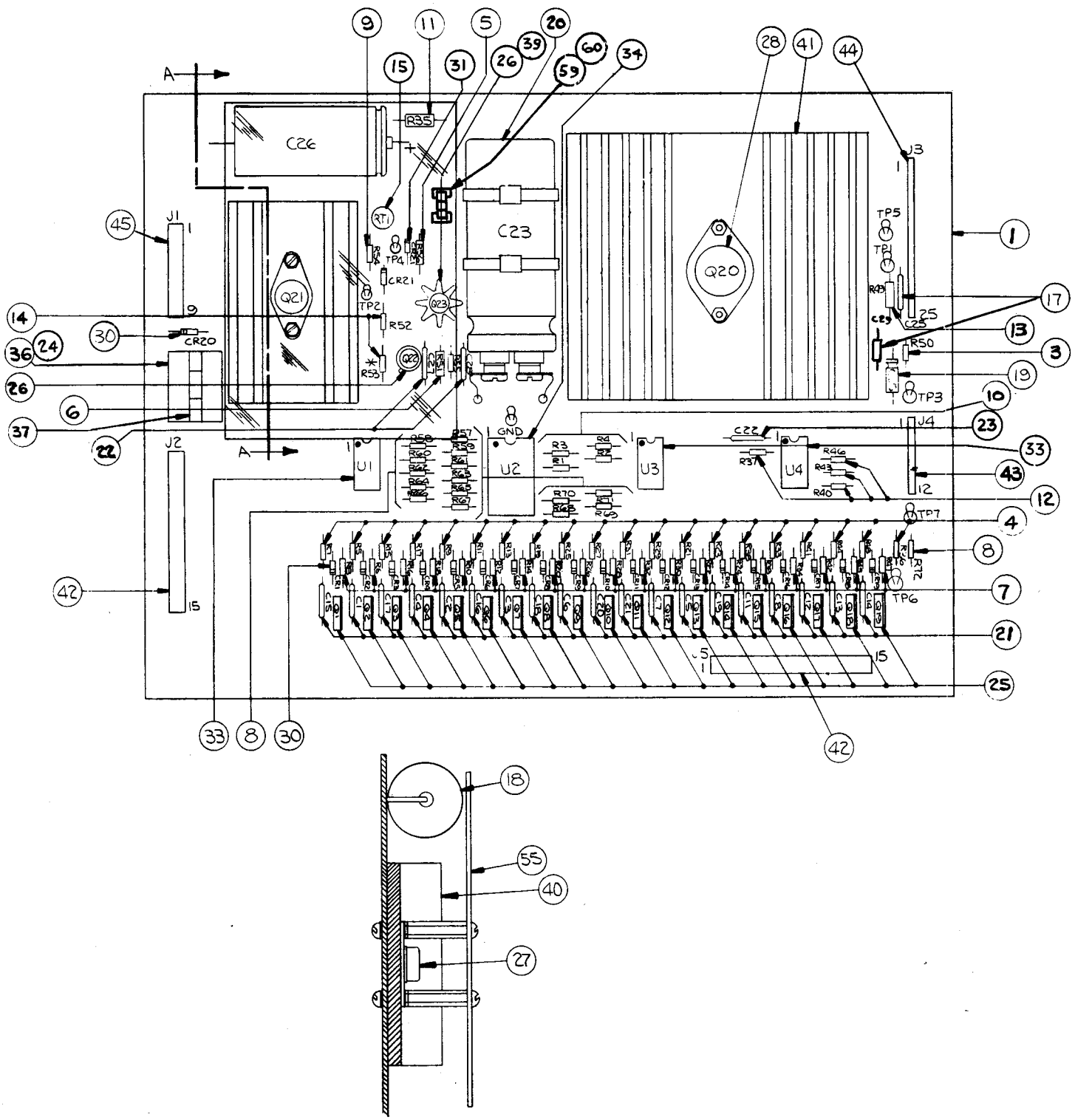

NOTE: INTERCHANGEABLE WITH AS-2518-16

A3: SOLENOID DRIVER/VOLTAGE REGULATOR MODULE

COMPONENT PARTS LIST

ITEM	REFERENCE DESIGNATION	BALLY PART #	DESCRIPTION
1	A3	AS-2518-22	Solenoid Driver/Voltage Regulator Module, Complete
3-14	Resistors		Resistor, See Schematic for value.
15	RT1	E-00599-0014	Pot. (Linear) 25K
17	C25, 29	E-00586-0014	Capacitor, .1 MFD, 20V
18	C26	E-00586-0059	Capacitor, 160 MFD, 350V
19	C24	E-00586-0063	Capacitor, 2 MFD @ 25V
20	C23	E-00586-0062	Capacitor, 11700 MFD, 20V
21	C1-C8, C11-C21	E-00586-0064	Capacitor, .002 MFD, 1kv
22	C27, C28	E-00586-0065	Capacitor, .01 MFD, 500V
24	K1	E-00146-0795	Relay, Printed Circuit
25	Q1-Q19	E-00585-0034	Transistor, SE9302
26	Q22, Q23	E-00585-0041	Transistor, 2N3440
27	Q21	E-00585-0042	Transistor, 2N3584
28	Q20	E-00710	+5V Regulator, LAS1405 or 78H05KC or LM323K
30	CR1-CR21	E-00587-0015	Diode (IN4004)
31	VR1	E-00598-0010	Diode, Zener 140V, IN5275A
33	U1, U3, U4	E-00681	I.C. Transistor Array, CA3081
34	U2	E-00620-0039	I.C. Binary to 1/16 Decoder, 74L154
36		E-00592-0002*	Relay Socket
37		M-1839*	Relay Holder
39		E-00682	Heat Sink, TO5
40		E-00682-0001	Heat Sink, TO66
41		E-00682-0002	Heat Sink, TO3 Case
42		E-00715-0039	15 Pin Wafer Connector
43		E-00715-0016	12 Pin Wafer Connector
44		E-00715-0020	25 Pin Wafer Connector
45		E-00715-0033	9 Pin Wafer Connctor
55		M-1838	Shield-Plexiglass
59		E-00148-0021	Fuse Clips
60	F1	E-00133-0029	Fuse 8 AG-3/16 Amp.
23	C22	E-00586-0085	Capacitor, .01 MFD, 25V

*USED WITH ITEM 24, E-00146-0791, PLUG IN RELAY ONLY

A2: POWER TRANSFORMER MODULE

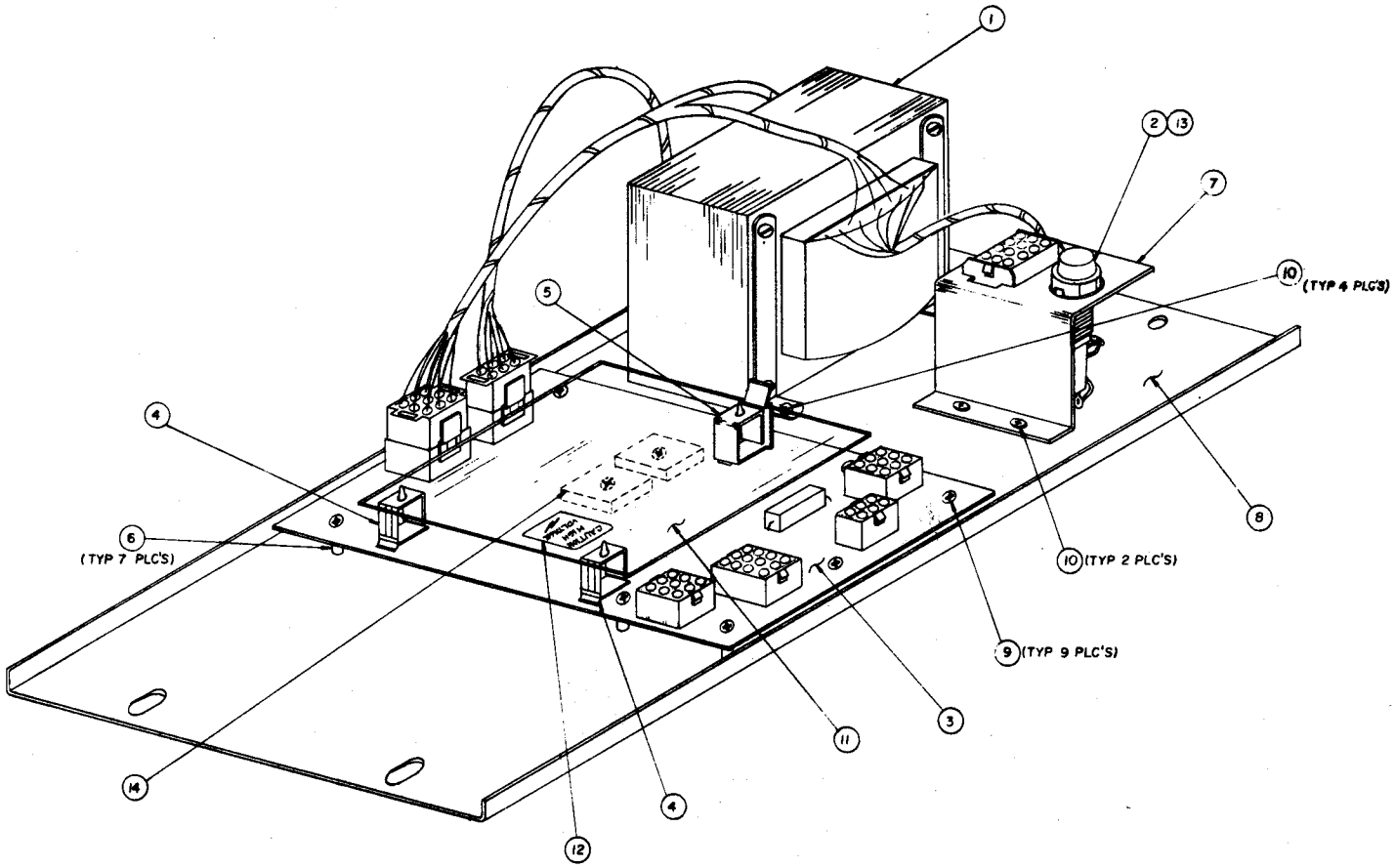

COMPONENT PARTS LIST

ITEM	REFERENCE DESIGNATION	BALLY PART #	DESCRIPTION
0	A2	AS-2877-6	Power Transformer Module, Complete
1		AS-3071-2	Transformer
2		E-148-25	Fuse Holder
3	A2	AS-2518-54	Power Module Assy.
4		M-1829-4	Hinged Support
5		M-1829-3	Edge Holder
6		M-1829-5	Spacer
7		P-6442-244b	Fuse & Connect Brkt.
8		P-6442-246	Chassis
9		RLPP-832-1812	Screw
10		RLPP-1032-1806	Screw
11		P-2692-2	Shield
12		M-469-936a	High Voltage Sticker
13		E-133-24	3A S.B. Fuse
14		M-1834	H. S. Compound

AS-2518-54 RECTIFIER BOARD ASSEMBLY

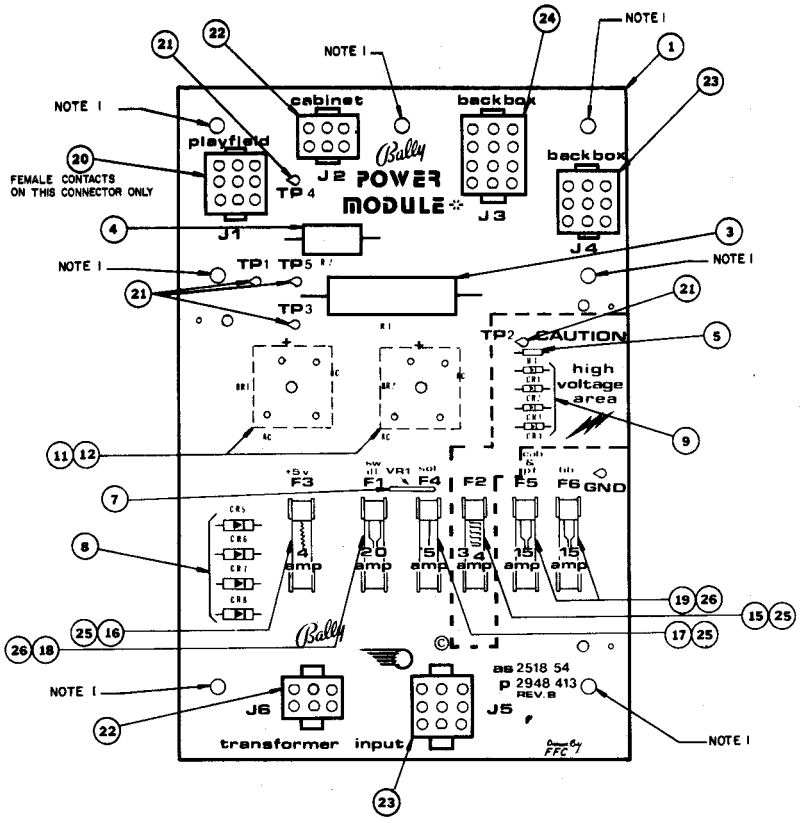

(Part of) A2: POWER TRANSFORMER MODULE

COMPONENT PARTS LIST

ITEM	REFERENCE DESIGNATION	BALLY PART #	DESCRIPTION
0	A2	AS-2877-6	Power Transformer Module, Complete
1	P/O A2	AS-2518-54	Rectifier Board Assembly, Complete
3	R1	E-00104-0092	Resistor, 10%, 600 Ohm, 10W
4	R2	E-00104-0091	Resistor, 25 Ohm, 5W
5	R3	E-00105-0226	Resistor, 5%, 100K Ohm, ¼W
7	VR1	E-00623	Varistor
8	CR5, CR6, CR7, CR8	E-00587-22 or 24	3A Diode
9	CR1, CR2, CR3, CR4	E-00587-0015	Diode (IN4004)
10			
11	Used with BR1-2	P-1973-480	Spacer
12	BR1, BR2	E-00602-0007	Bridge Rectifier
15	F2	E-00133-0028	Fuse, ¾A, 250V, 3AG
16	F3	E-00133-0004	Fuse, 4A, 32V, 3AG
17	F4 NOTE 1	E-00133-0005	Fuse 5A, 32V, 3AG
18	F1	E-00133-0027	Fuse, 20A, 32V, 3AG
19	F5, F6	E-00133-0015	Fuse, 15A, 32V, 3AG
20	J1	E-806-9	9 CKT Socket Header
21	TP1, 2, 3, 4, 5	P-05399	Test Clip
22	J2, J6	E-805-6	6 CKT Pin Header
23	J4, J5	E-805-9	9 CKT Pin Header
24	J3	E-805-12	12 CKT Pin Header
25	F2, 3, 4	E-00148-0021	Fuse Clips
26	F1, 5, 6	E-00148-0022	Fuse Clips (Low Resistance)

NOTE 1—All games with 4 or more flippers use 7A

A8: SOUND MODULE
COMPONENT PARTS LIST

ITEM	REFERENCE DESIGNATION	BALLY PART NO.	DESCRIPTION
1	A8 (see note 1)	AS-3022-15	PWB Module Complete
2	U1	E-620-124	Sound Chip AY-3-8910
3	U2	E-620-29	PIA, 6820/21
4	U3	E-620-125 (E620-128)	CPU, 6808 (6802 Note 3)
5	U10	E-620-30	Ram, 6810 (Note 3)
6	U5	E-620-33	Hex Inverter 4049B
7	U6	E-620-5	Quad 2 Input 4011B
8	U8	E-620-126	Amp, LM3900
9	U9	E-620-127	Power Amp, TDA 2002
10	Q1	E-585-31	Transistor, 2N3904
11	CR1, 2	E-587-6	Diode, 1N4004
12	SW1	E-658-1	Switch
13	C12	E-586-118	Cap. .2MF ±20% Y5P, 16 V.
14	C2	E-586-130	Cap. .47 ±20%
15	C16	E-586-83	Cap. 470 PF 50 V.
16	C3	E-586-120	Cap. 68 PF, ±20% 1K
17	C18, 19	E-586-121	Cap. 27 PF, ±20% 1K
18	Y1	E-744-5	Crystal, 3.579545 MHZ
19	J2	E-736-2	Connector, Wafer, 2 Pin KK156
20	J1	E-736-15	Connector, Wafer, 15 Pin KK156
21	R9	E-105-196	Resistor, 1 Ohm, ¼ W., 5%
22	R8	E-105-211	Resistor, 2.2 Ohm, ¼ W., 5%
23	R7	E-105-303	Resistor, 220 Ohm, ¼ W., 5%
24	R1	E-105-230	Resistor, 1 K, ¼ W., 5%
25	R21, 22, 23, 24	E-105-238	Resistor, 3.3K. Ohm, ¼ W., 5%
26	R6	E-105-239	Resistor, 4.7K., ¼ W., 5%
27	R3, 14, 15, 16, 17, 18, 19, 25	E-105-185	Resistor, 10K., ¼ W., 5%
28	R2	E-105-245	Resistor, 30K., ¼ W., 5%
29	R10	E-105-252	Resistor, 180K., ¼ W., 5%
30	R4	E-105-225	Resistor, 200K., ¼ W., 5%
31	R5, 20	E-105-285	Resistor, 1M, ¼ W., 5%
32	RT1	E-599-16	Potentiometer 1K
33	C23	E-586-122	Cap. .001 ±20% 2SF
34	C15	E-586-123	Cap. 4700 MF @ 25 V.
35	C7	E-586-124	Cap. 470 MF @ 6.3 V
36	C8	E-586-129	Cap. 470 MF @ 16 V.
37	C5, 13	E-586-90	Cap. 1 MF @ 50 V.
38	C9, 1, 14, 6	E-586-89	Cap. .1 MF
39	C4, 22, 17, 21, 20, 24	E-586-85	Cap. .01 MF
40	XU10, XU4	E-712	Socket, 24 Pin
41	XU1, XU2, XU3	E-712-1	Socket, 40 Pin
42	Used with 43	LSPR-00632-1106	Bolt, 6 x 32 x 3/8
43	Used with 42	N-00632-2112	Nut, 6 x 32
44	H.S for U9	E-682-8	Heat Sink, 6030BTT
45	Used with C15	E-647-5	Ty Rap
46	TP1, 2, 3, 4, 5, 6	P-5399	Test Point
47	Use with 44, 9	M-1834	Thermal Grease
48	Jumper, B		22 AWG Wire, Solid Tinned
		W-1211c	Schematic

NOTE 1: When ordering specify name of game.

NOTE 2: Order replacement memory chip U4 specifying name of game and part no. stamped on chip.

NOTE 3: When using item 4, 6808 you must use item 5, 6810 and the "B" jumper. When item, 6802 is available delete item 5 and use "A" jumper.

AS-2518-51 SOUND MODULE

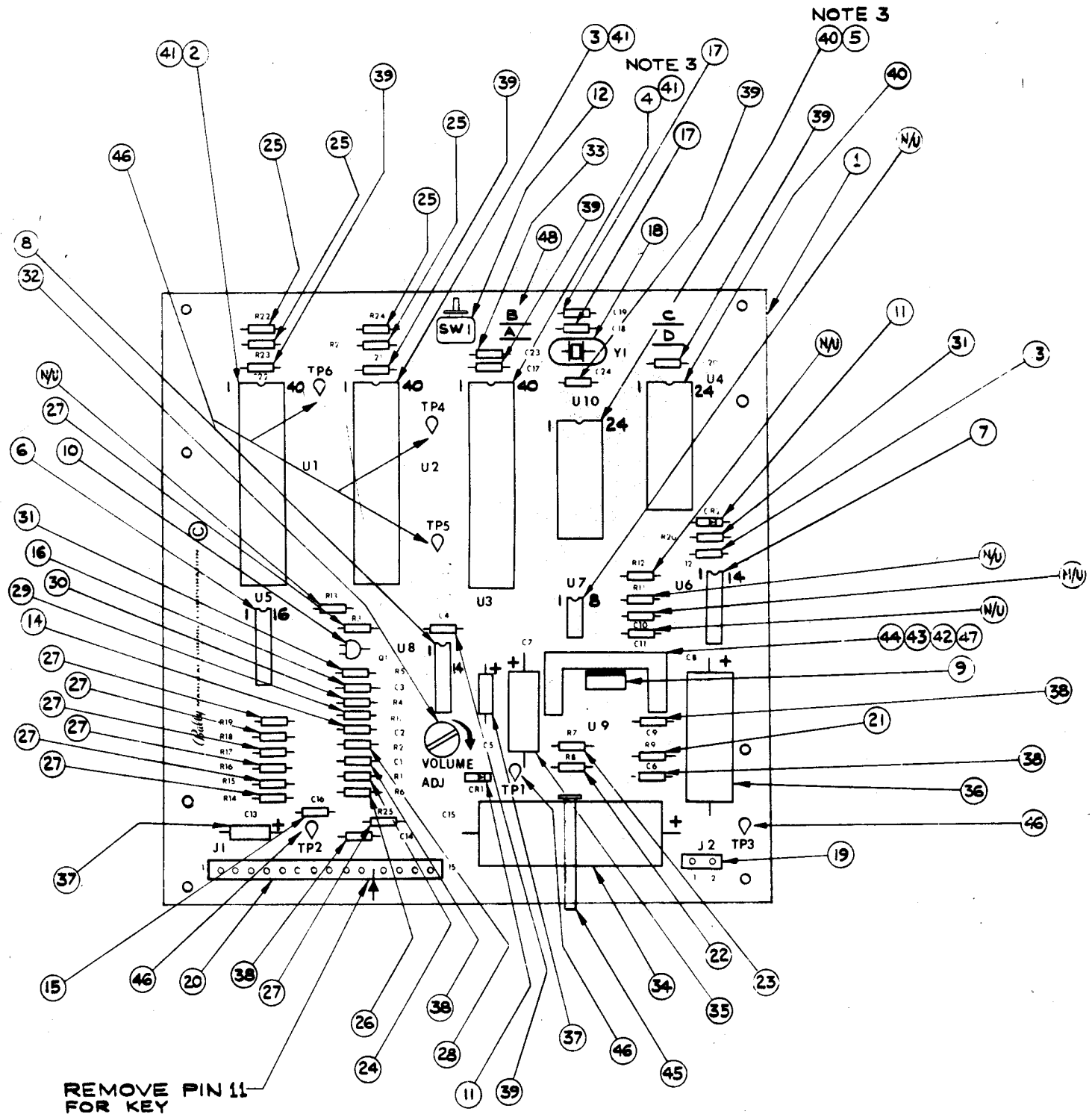

A8: SOUND MODULE
COMPONENT PARTS LIST

ITEM	REFERENCE DESIGNATION	BALLY PART NO.	DESCRIPTION
1	A8 (see note 1)	AS-3022-15	PWB Module Complete
2	U1	E-620-124	Sound Chip AY-3-8910
3	U2	E-620-29	PIA, 6820/21
4	U3	E-620-125 (E620-128)	CPU, 6808 (6802 Note 3)
5	U10	E-620-30	Ram, 6810 (Note 3)
6	U5	E-620-33	Hex Inverter 4049B
7	U6	E-620-5	Quad 2 Input 4011B
8	U8	E-620-126	Amp, LM3900
9	U9	E-620-127	Power Amp, TDA 2002
10	Q1	E-585-31	Transistor, 2N3904
11	CR1, 2	E-587-6	Diode, 1N4004
12	SW1	E-658-1	Switch
13	C12	E-586-118	Cap. .2MF ±20% Y5P, 16 V.
14	C2	E-586-130	Cap. .47 ±20%
15	C16	E-586-83	Cap. 470 PF 50 V.
16	C3	E-586-120	Cap. 68 PF, ±20% 1K
17	C18, 19	E-586-121	Cap. 27 PF, ±20% 1K
18	Y1	E-744-5	Crystal, 3.579545 MHZ
19	J2	E-736-2	Connector, Wafer, 2 Pin KK156
20	J1	E-736-15	Connector, Wafer, 15 Pin KK156
21	R9	E-105-196	Resistor, 1 Ohm, ¼ W., 5%
22	R8	E-105-211	Resistor, 2.2 Ohm, ¼ W., 5%
23	R7	E-105-303	Resistor, 220 Ohm, ¼ W., 5%
24	R1	E-105-230	Resistor, 1 K, ¼ W., 5%
25	R21, 22, 23, 24	E-105-238	Resistor, 3.3K. Ohm, ¼ W., 5%
26	R6	E-105-239	Resistor, 4.7K., ¼ W., 5%
27	R3, 14, 15, 16, 17, 18, 19, 25	E-105-185	Resistor, 10K., ¼ W., 5%
28	R2	E-105-245	Resistor, 30K., ¼ W., 5%
29	R10	E-105-252	Resistor, 180K., ¼ W., 5%
30	R4	E-105-225	Resistor, 200K., ¼ W., 5%
31	R5, 20	E-105-285	Resistor, 1M, ¼ W., 5%
32	RT1	E-599-16	Potentiometer 1K
33	C23	E-586-122	Cap. .001 ±20% 2SF
34	C15	E-586-123	Cap. 4700 MF @ 25 V.
35	C7	E-586-124	Cap. 470 MF @ 6.3 V
36	C8	E-586-129	Cap. 470 MF @ 16 V.
37	C5, 13	E-586-90	Cap. 1 MF @ 50 V.
38	C9, 1, 14, 6	E-586-89	Cap. .1 MF
39	C4, 22, 17, 21, 20, 24	E-586-85	Cap. .01 MF
40	XU10, XU4	E-712	Socket, 24 Pin
41	XU1, XU2, XU3	E-712-1	Socket, 40 Pin
42	Used with 43	LSPR-00632-1106	Bolt, 6 x 32 x 3/8
43	Used with 42	N-00632-2112	Nut, 6 x 32
44	H.S for U9	E-682-8	Heat Sink, 6030BTT
45	Used with C15	E-647-5	Ty Rap
46	TP1, 2, 3, 4, 5, 6	P-5399	Test Point
47	Use with 44, 9	M-1834	Thermal Grease
48	Jumper, B		22 AWG Wire, Solid Tinned
		W-1211c	Schematic

NOTE 1: When ordering specify name of game.

NOTE 2: Order replacement memory chip U4 specifying name of game and part no. stamped on chip.

NOTE 3: When using item 4, 6808 you must use item 5, 6810 and the "B" jumper. When item, 6802 is available delete item 5 and use "A" jumper.

AS-2518-51 SOUND MODULE

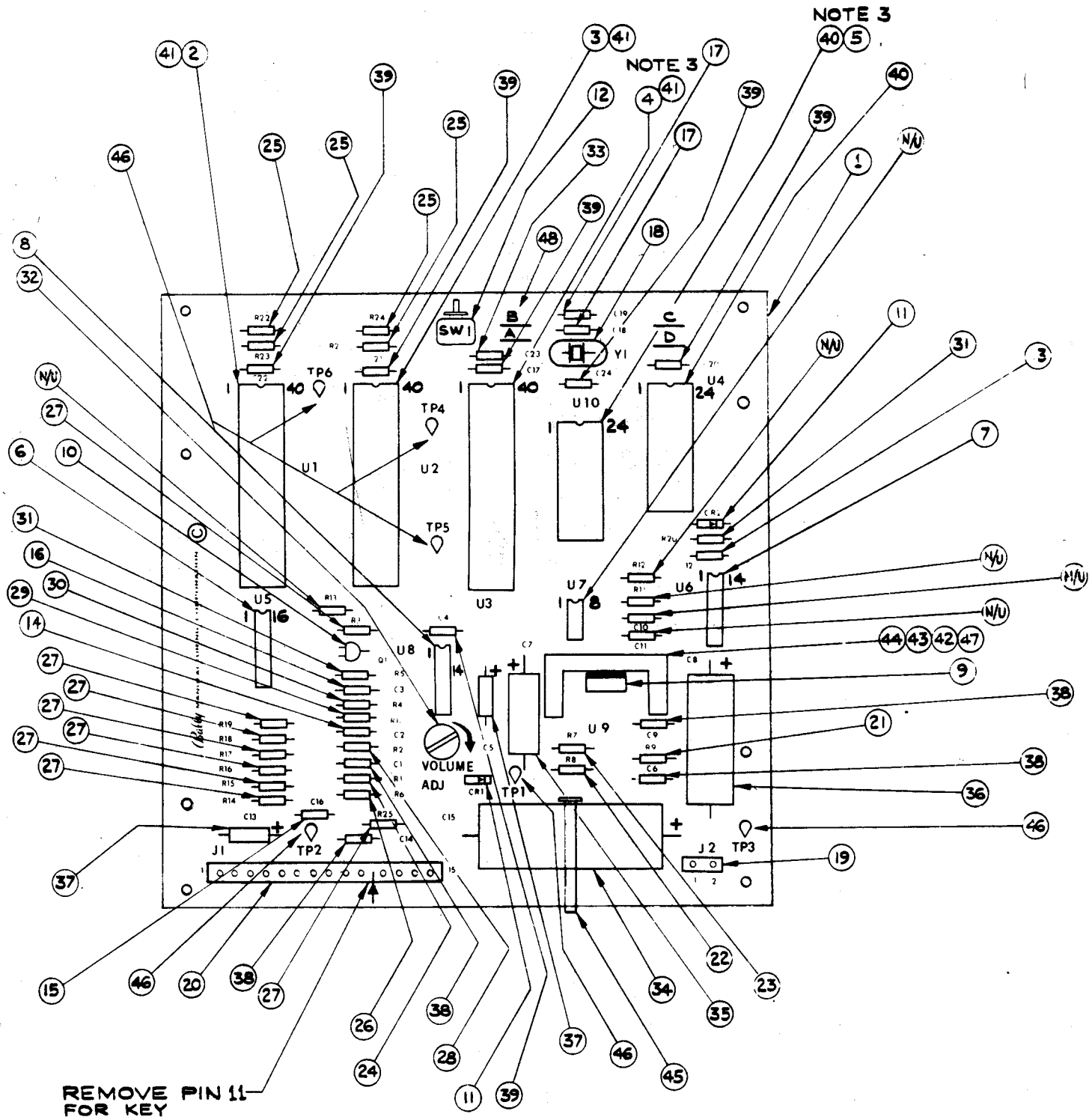

AS-2518-58 DISPLAY DRIVER MODULE

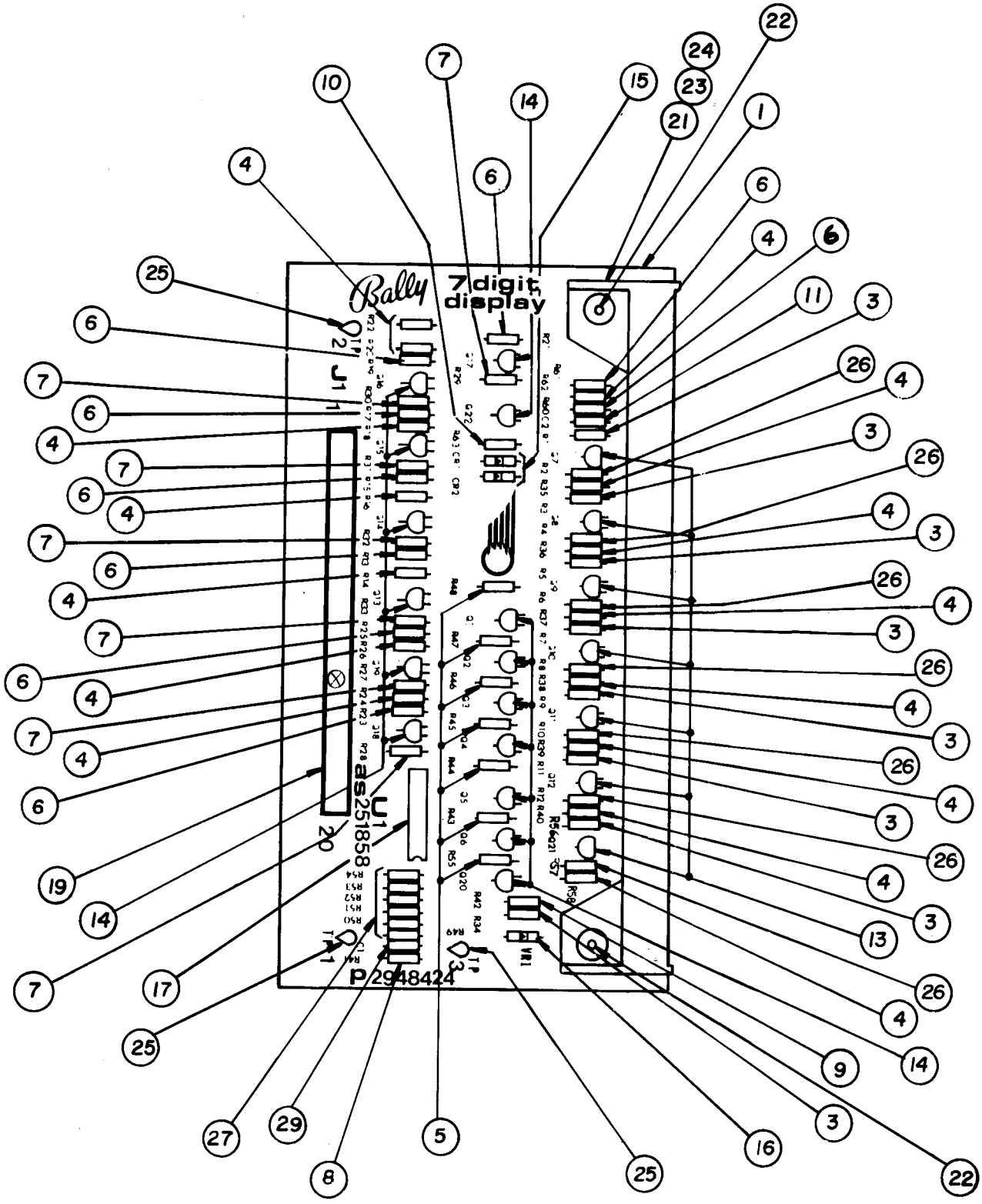

A1: 7 DIGIT DISPLAY DRIVER MODULE

COMPONENTS PARTS LIST

ITEM	QTY.	REFERENCE DESIGNATION	BALLY PART #	DESCRIPTION
1	1	A1	AS-2518-58	7 Digit Display Driver, Complete
3	8	R1, R3, R5, R7, R9, R11, R34, R56	E-105-331	Resistor, 100K Ω
4	15	R14, R16, R18, R20, R22, R24, R26, R35, R36, R37, R38, R39, R40, R58, R62	E-105-227	Resistor, 300K Ω
5	7	R43, R44, R45, R46, R47, R48, R55	E-105-228	Resistor, 9.1K Ω
6	9	R13, R15, R17, R19, R21, R23, R25, R61, R60	E-105-229	Resistor, 1.5K Ω
7	7	R27, R28, R29, R30, R31, R32, R33	E-105-222	Resistor, 1.2K Ω
8	1	R41	E-105-231	Resistor, 39K Ω
9	1	R42	E-105-271	Resistor, 240K Ω
10	1	R63	E-105-248	Resistor, 150K Ω
11	1	C2	E-586-65	Capacitor, .01 MFD, 500V
13	7	Q7, Q8, Q9, Q10, Q11, Q12, Q21	E-585-32	Transistor (2N5401)
14	15	Q1, Q2, Q3, Q4, Q5, Q6, Q13, Q14, Q15, Q16, Q17, Q18, Q19, Q20, Q22	E-585-33	Transistor (MPS-A42)
15	2	CR1-2	E-587-14	Diode (IN4148)
16	1	VR1	E-598-7	Zener Diode, 110V (IN3045A)
17	1	U1	E-620-38	I.C. Decoder (MC14543)
18				
19	2	J1	E-736-10	10 Pin Wafer Pin Connector (KK-156)
21	1	DS1	E-680-7	7 Digital Display Panel
22	2		M-1836	Hi-Lo Screw, W/H
23	1		P-2399	Display Mounting (Top)
24	1		P-2399-1	Display Mounting (Bottom)
25	3	TP1-3	P-5399	Test Clip
26	7	R2, R4, R6, R8, R10, R12, R57	E-105-287	Resistor, 2.2K Ω
27	6	R49, R50, R51, R52, R53, R54	E-105-242	Resistor, 20K Ω
28				
29	1	C1	E-586-85	Capacitor, .01 MFD, 25V

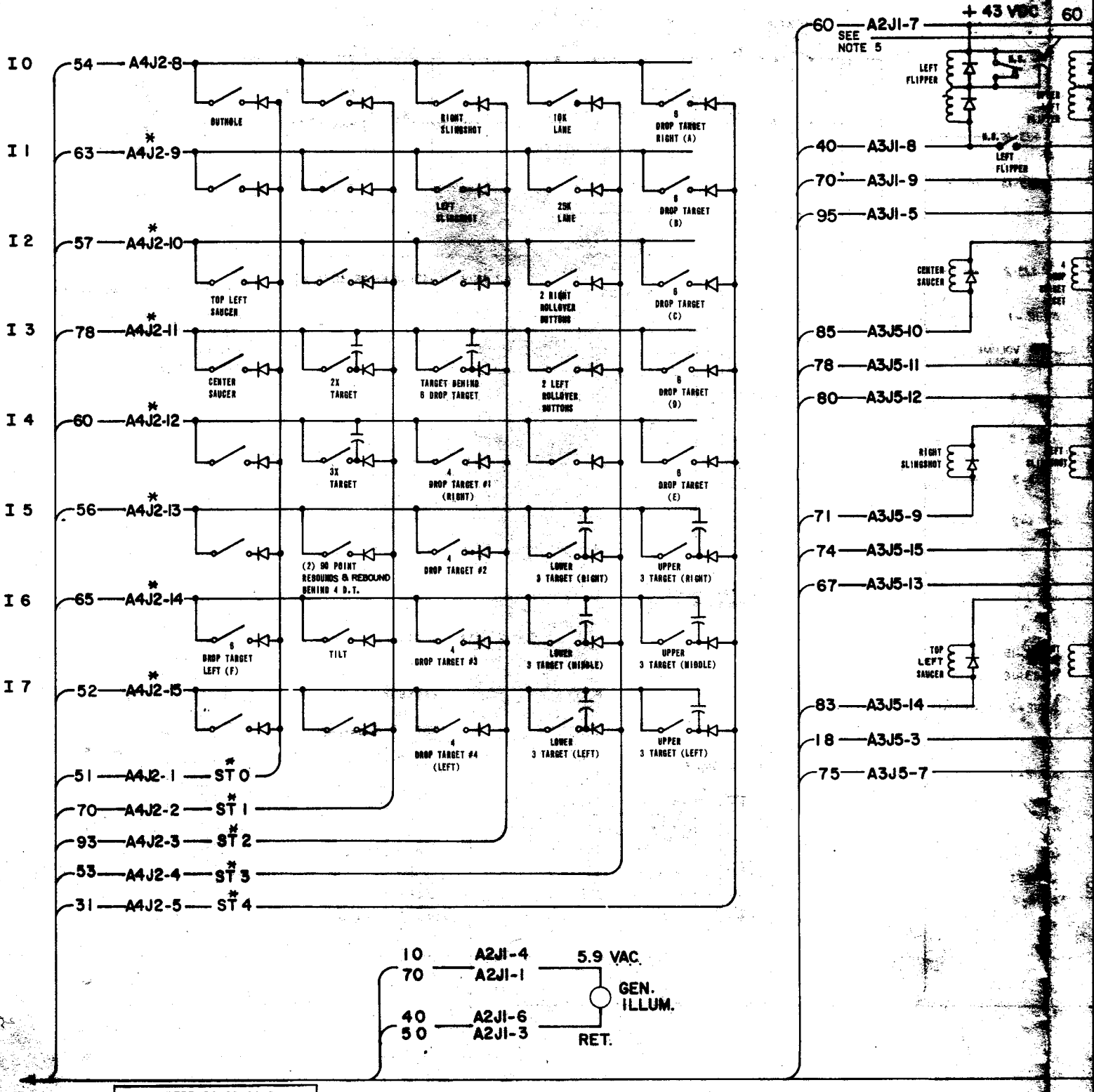

WIRE COLOR CODE
1-RED -R- 6-BROWN -BR-
2-BLUE -BLU- 7-ORANGE -O-
3-YELLOW -Y- 8-BLACK -B-
4-GREEN -G- 9-GRAY
5-WHITE -W- 0-NO TRACER
J-JUMPER
1-FIRST NUMBER-BODY COLOR
2-SECOND NUMBER-TRACER COLOR
EXAMPLE: 50 -WHITE
51 -WHITE-RED

PLAYFIELD A6

NOTES

1. INDICATES NOT USED
2. N/U = NOT USED ON PLAYFIELD
3. * INDICATES AID TEST POINT
4. COIL DIODES ARE IN4004 (E-587-6) SWITCH DIODES ARE IN4148. ALL CAPACITORS ARE .05 MFD. (E-586-80)
5. GERMANY ONLY - CAPACITOR .01 MFD. @ 500V. (E-586-65)

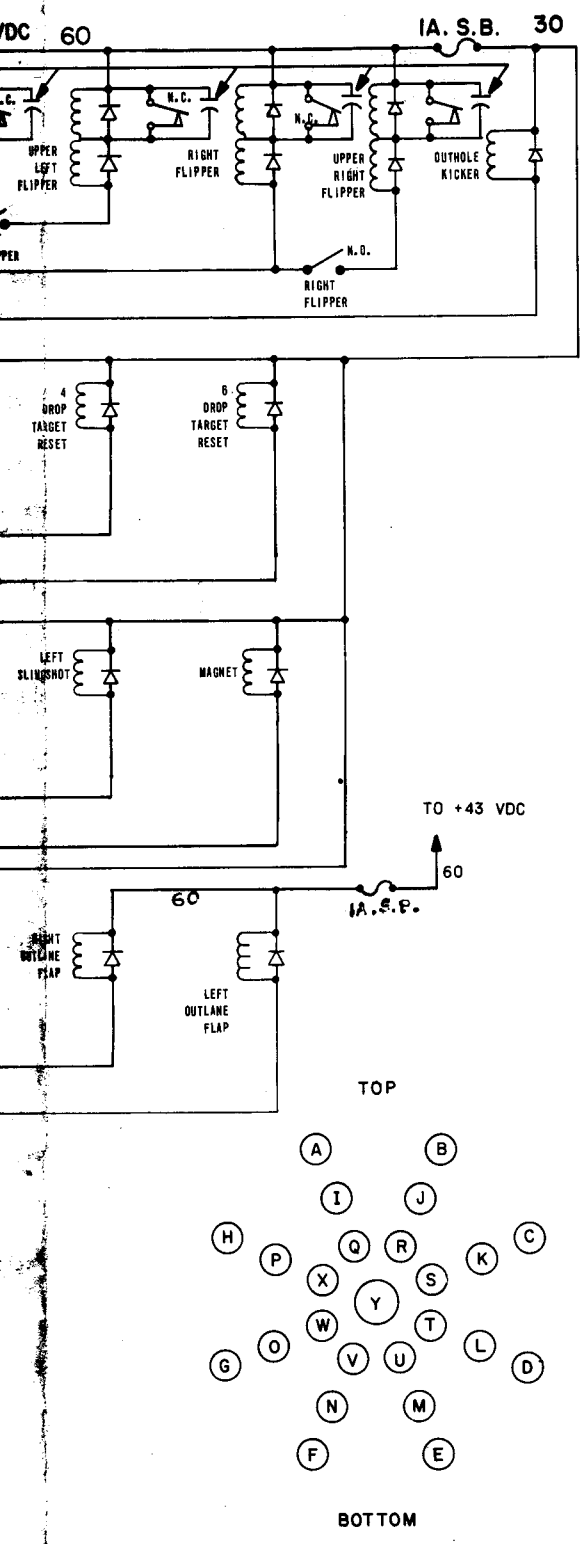

58	A5J1-18 "Q" 5K GREEN WHEEL	5.4 VDC
60	A5J1-19 "U" 5K GREEN WHEEL	
57	A5J1-17 "I" 5K AMBER WHEEL	
12	A5J1-23 "M" 5K AMBER WHEEL	
67	A5J1-14 "A" 5K BLUE WHEEL	
13	A5J1-15 "E" 5K BLUE WHEEL	
15	A5J1-16 6 DROP TARGET (E) 100K	
78	A5J1-28 6 DROP TARGET RIGHT (A) 100K	
50	A5J1-24 2X ARROW	
75	A5J1-25 2 RIGHT ROLLOVER BUTTONS	
47	A5J1-26 SAME PLAYER SHOOT AGAIN	
53	A5J1-27 4 DROP TARGET #1 (RIGHT)	
41	A5J1-1 "R" 25K GREEN WHEEL	
43	A5J1-9 "V" 25K GREEN WHEEL	
51	A5J1-8 "J" 25K AMBER WHEEL	
45	A5J1-3 "N" 25K AMBER WHEEL	
52	A5J1-2 "B" 25K BLUE WHEEL	
23	A5J1-10 "F" 25K BLUE WHEEL	
34	A5J1-7 6 DROP TARGET LEFT (F) 20K	
25	A5J1-6 6 DROP TARGET (B) 20K	
48	A5J1-5 3X ARROW	
65	A5J1-11 2 LEFT ROLLOVER BUTTONS	
35	A5J1-4 N/U	
61	A5J1-12 4 DROP TARGET #2	
30	A5J1-13 6 DROP TARGET (C) 150K	

90

38	A5J3-26 "S" 5K GREEN WHEEL	A5J2-16 — CENTER SAUCER (20)
36	A5J3-25 "W" 5K GREEN WHEEL	A5J2-14 — CENTER SAUCER (15)
67	A5J3-19 "K" 5K AMBER WHEEL	A5J2-1 — UPPER 3 TARGET (LEFT)
13	A5J3-17 "O" 5K AMBER WHEEL	A5J2-2 — UPPER 3 TARGET (MIDDLE)
25	A5J3-16 "C" 5K BLUE WHEEL	A5J2-15 — UPPER 3 TARGET (RIGHT)
98	A5J3-23 "G" 5K BLUE WHEEL	A5J2-7 — LOWER 3 TARGET (LEFT)
40	A5J3-27 TARGET 2X	A5J2-6 — LOWER 3 TARGET (MIDDLE)
64	A5J3-21 2X SCORES	A5J2-20 — LOWER 3 TARGET (RIGHT)
80	A5J3-20 6 DROP TARGET E.B. ARROW	
23	A5J3-22 CENTER SAUCER (SPECIAL)	
72	A5J3-24 4 DROP TARGET #3	
10	A5J3-1 "T" 10K GREEN WHEEL	
21	A5J3-12 "X" 10K GREEN WHEEL	
53	A5J3-15 "L" 10K AMBER WHEEL	
20	A5J3-11 "P" 10K AMBER WHEEL	
15	A5J3-9 "D" 10K BLUE WHEEL	
35	A5J3-13 CREDIT INDICATOR	
14	A5J3-4 TARGET 3X	
95	A5J3-2 6 DROP TARGET (D) 20K	
91	A5J3-10 3X SCORES	
56	A5J3-18 "Y" WHEEL SPECIAL	
81	A5J3-3 "H" 10K BLUE WHEEL	
84	A5J3-14 4 DROP TARGET #4 (LEFT)	
20	A2J1-5 FEATURE LAMP BUS	10 AMP 20

43 12 60 20 23 91 85 98

TO W-1182-44

TO A2J1-8 90 10 AMP

ALL DESIGN, OPERATIVE AND PROCESS DATA PERTAINING TO THE ARTICLE SHOWN ON THIS SHEET IS THE PROPERTY OF BALLY MFG. CORP., CHICAGO, ILL. THIS INFORMATION IS DISCLOSED IN CONFIDENCE AND IS NOT TO BE COPIED, REPRODUCED, REVEALED TO OR APPROPRIATED BY OTHERS, IN PART OR IN WHOLE, WITHOUT THE EXPRESS CONSENT OF THE OWNERS. THE PRINT IS LOANED AND MUST NOT BE USED IN ANY MANNER DETRIMENTAL TO THE INTEREST OF THE OWNERS, AND MUST BE RETURNED ON DEMAND.

LET.	CHANGE	DATE	BY	CK.

REMOVE ALL BURRS

TOLERANCES ON DIMENSIONS UNLESS OTHERWISE SPECIFIED
FRACTIONS ± 1/64
DECIMALS ± .005
ANGLES ± 1°

DO NOT SCALE DRAWING

DR. BY | DATE
CK. BY | DATE
APP'D BY JD | DATE 9-28-2
APP'D BY | DATE 9.30.82
FINISH:
HARDENING:

Bally MANUFACTURING CORP.
2640 BELMONT AVENUE
CHICAGO, ILLINOIS
#1276

PRINT CONTROL | PROD ENG | PLAN ENG | PROD DESIGN | QUAL ENG | PUR | TOOL ENG | PROD ENG | TOTAL | SCALE

NAME WIRING DIAGRAM PLAYFIELD

ASSEM. NO. USED ON W

MATERIAL BMX

PART NO. W-1192-39c

STANPAT PRODUCTS INC PORT WASHINGTON, N.Y.

A6

E IN 4148,(E-587-14)

PART NO. W-1186-22c

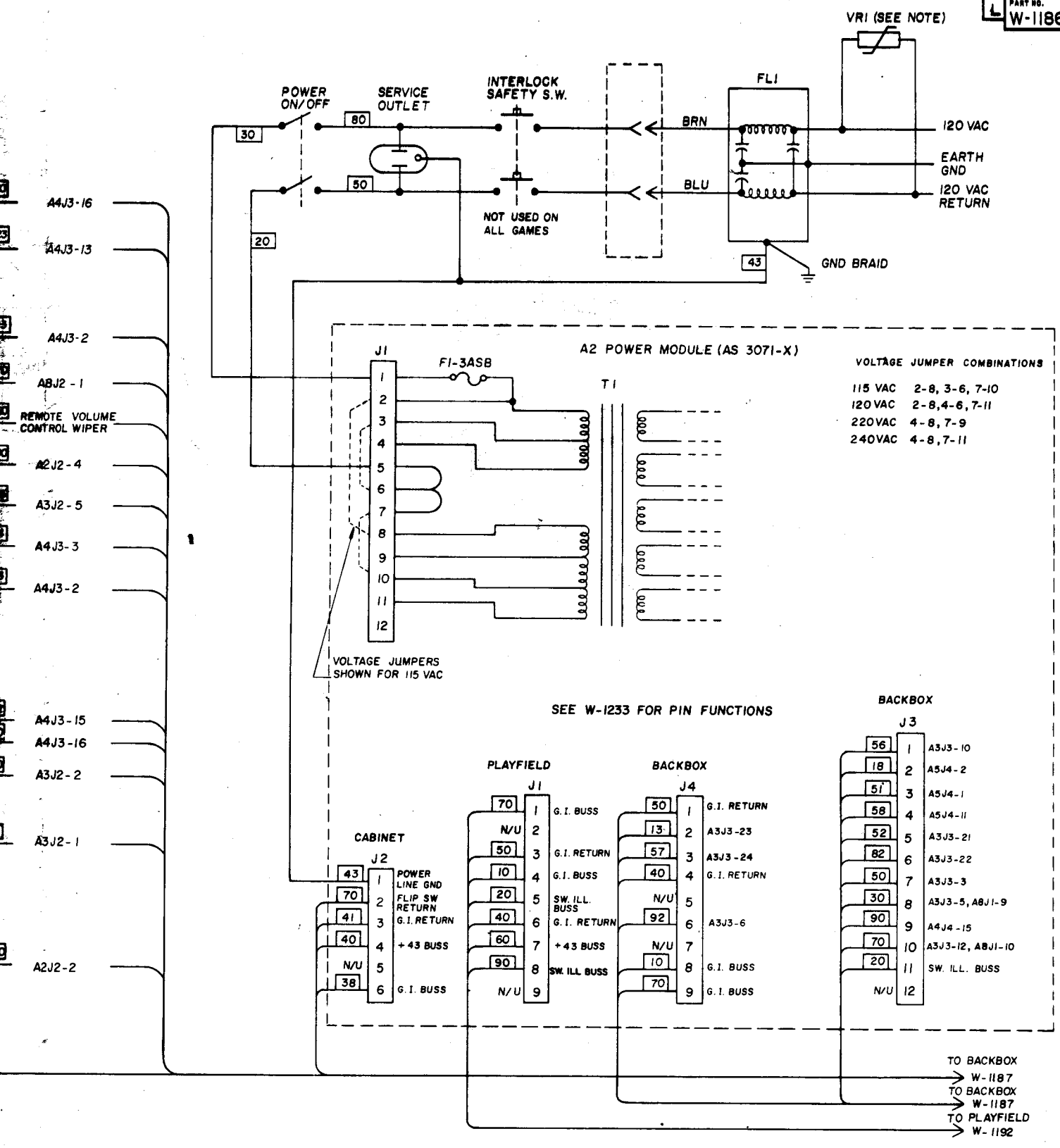

WIRING
4004, (E-587-6)

ALL DESIGN, OPERATIVE AND PROCESS DATA PERTAINING TO THE ARTICLE SHOWN ON THIS SHEET IS THE PROPERTY OF BALLY MFG. CO. CHICAGO. THIS INFORMATION IS DISCLOSED IN CONFIDENCE AND IS NOT TO BE COPIED, REPRODUCED, REVEALED TO OR APPROPRIATED BY OTHERS IN PART OR IN WHOLE WITHOUT THE EXPRESS CONSENT OF THE OWNERS. THE PRINT IS LOANED AND MUST NOT BE USED IN ANY MANNER DETRIMENTAL TO THE INTERESTS OF THE OWNERS AND MUST BE RETURNED ON DEMAND.

NO	LET	CHANGE	DATE	BY

REMOVE ALL BURRS
TOLERANCES ON DIMENSIONS UNLESS OTHERWISE SPECIFIED
FRACTIONS ±
DECIMALS ±
EXCEPT HOLE DIA'S
ANGLES ±
DO NOT SCALE DRAWING

DR BY M.T.	DATE 7-26-82	
CK BY	DATE 7-26-82	
APD BY JD	DATE 9-2-82	
APD BY	DATE	

Bally MANUFACTURING CORP.
2640 BELMONT AVENUE
CHICAGO ILLINOIS
#1276

PRINT CONTROL

NAME: WIRING DIAGRAM - CABINET
ASSEM NO USED
SCALE

MATERIAL: BMX
PART NO. W-1186-22c

NOTES: (CAUTION)

1. USE BALLY PART NO. E-713 FOR 115-120 VAC.
2. USE BALLY PART NO. E-713-1 FOR 220-240 VAC.
3. # INDICATES AID TEST POINT.

TO	J1 PIN	TO	J1 PIN
A4J3-11	1	A4J3-3	11
A4J3-10	2	A2J2-4	15
A4J3-11	3	A3J2-8	16
A4J3-12	4	A2J2-6	17
A4J3-13	5	A8J2-3	18
A4J3-14	6	A4J3-1	19
A4J3-15	7	A8J2-7	20
A4J3-16	8	SPEAKER	9
A4J3-2	10	A8J2-1	12
DOOR PLUG		A8J2-2	13

A7 CABINET ASS'Y. WIRING

NOTE: DIODES ARE IN4004, 1A-400 PIV

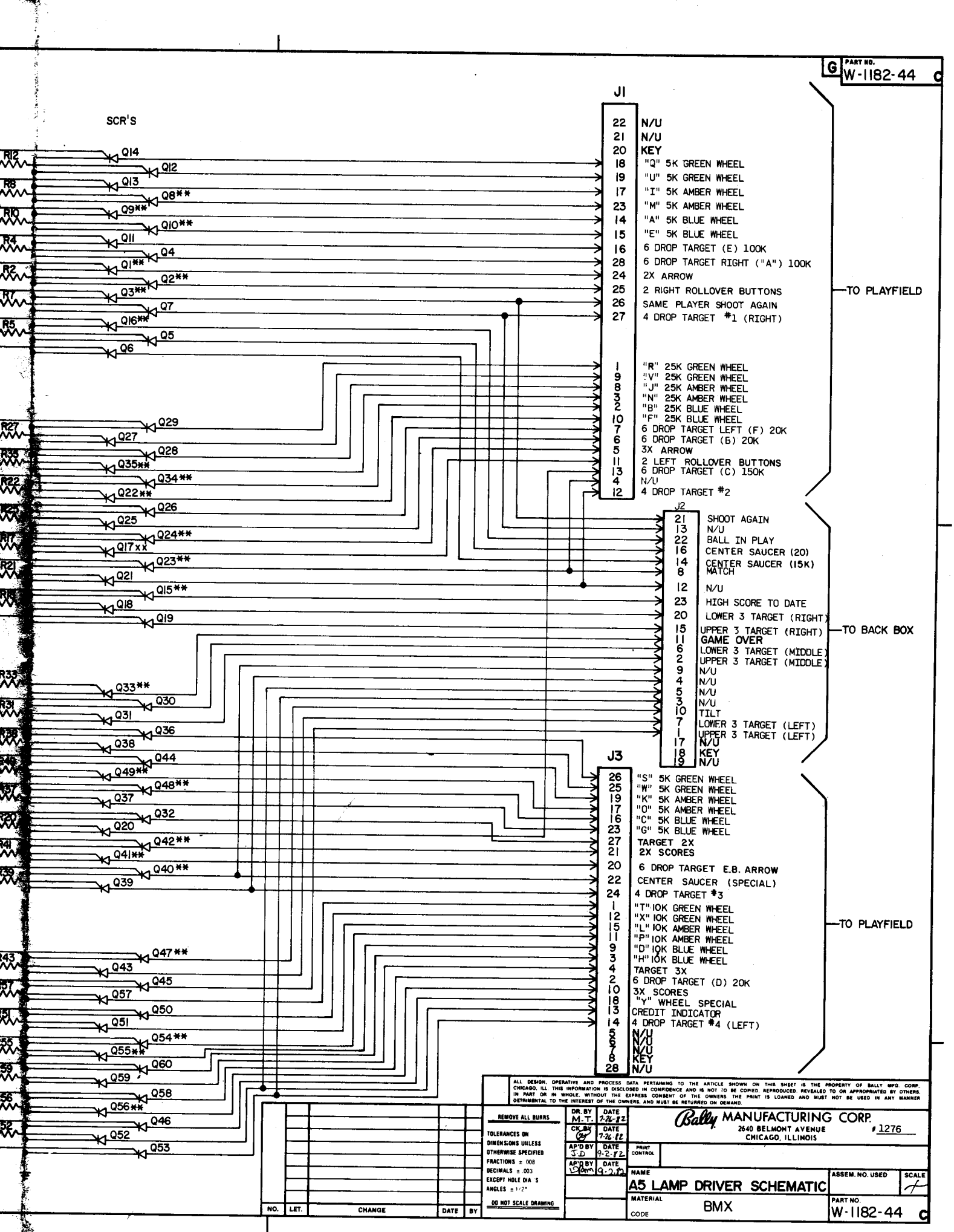
G PART NO. W-1182-44 C
SCR'S
J1
22 N/U
21 N/U
20 KEY
18 "Q" 5K GREEN WHEEL
19 "U" 5K GREEN WHEEL
17 "I" 5K AMBER WHEEL
23 "M" 5K AMBER WHEEL
14 "A" 5K BLUE WHEEL
15 "E" 5K BLUE WHEEL
16 6 DROP TARGET (E) 100K
28 6 DROP TARGET RIGHT ("A") 100K
24 2X ARROW
25 2 RIGHT ROLLOVER BUTTONS
26 SAME PLAYER SHOOT AGAIN
27 4 DROP TARGET #1 (RIGHT)
1 "R" 25K GREEN WHEEL
9 "V" 25K GREEN WHEEL
8 "J" 25K AMBER WHEEL
3 "N" 25K AMBER WHEEL
2 "B" 25K BLUE WHEEL
10 "F" 25K BLUE WHEEL
7 6 DROP TARGET LEFT (F) 20K
6 6 DROP TARGET (B) 20K
5 3X ARROW
11 2 LEFT ROLLOVER BUTTONS
13 6 DROP TARGET (C) 150K
4 N/U
12 4 DROP TARGET #2
TO PLAYFIELD
J2
21 SHOOT AGAIN
13 N/U
22 BALL IN PLAY
16 CENTER SAUCER (20)
14 CENTER SAUCER (15K)
8 MATCH
12 N/U
23 HIGH SCORE TO DATE
20 LOWER 3 TARGET (RIGHT)
15 UPPER 3 TARGET (RIGHT)
11 GAME OVER
6 LOWER 3 TARGET (MIDDLE)
2 UPPER 3 TARGET (MIDDLE)
9 N/U
4 N/U
5 N/U
3 N/U
10 TILT
7 LOWER 3 TARGET (LEFT)
1 UPPER 3 TARGET (LEFT)
17 N/U
18 KEY
19 N/U
TO BACK BOX
J3
26 "S" 5K GREEN WHEEL
25 "W" 5K GREEN WHEEL
19 "K" 5K AMBER WHEEL
17 "O" 5K AMBER WHEEL
16 "C" 5K BLUE WHEEL
23 "G" 5K BLUE WHEEL
27 TARGET 2X
21 2X SCORES
20 6 DROP TARGET E.B. ARROW
22 CENTER SAUCER (SPECIAL)
24 4 DROP TARGET #3
1 "T" 10K GREEN WHEEL
12 "X" 10K GREEN WHEEL
15 "L" 10K AMBER WHEEL
11 "P" 10K AMBER WHEEL
9 "D" 10K BLUE WHEEL
3 "H" 10K BLUE WHEEL
4 TARGET 3X
2 6 DROP TARGET (D) 20K
10 3X SCORES
18 "Y" WHEEL SPECIAL
13 CREDIT INDICATOR
14 4 DROP TARGET #4 (LEFT)
5 N/U
6 N/U
7 N/U
8 KEY
28 N/U
TO PLAYFIELD
R12 R8 R10 R4 R2 R7 R5
Q14 Q12 Q13 Q8** Q9** Q10** Q11 Q4 Q1** Q2** Q3** Q7 Q16** Q5 Q6
R27 R35 R22 R25 R17 R21 R15
Q29 Q27 Q28 Q35** Q34** Q22** Q26 Q25 Q24** Q17xx Q23** Q21 Q15** Q18 Q19
R33 R31 R38 R40 R37 R20 R41 R39
Q33** Q30 Q31 Q36 Q38 Q44 Q49** Q48** Q37 Q32 Q20 Q42** Q41** Q40** Q39
R43 R57 R51 R55 R59 R56 R52
Q47** Q43 Q45 Q57 Q50 Q51 Q54** Q55** Q60 Q59 Q58 Q56** Q46 Q52 Q53
ALL DESIGN, OPERATIVE AND PROCESS DATA PERTAINING TO THE ARTICLE SHOWN ON THIS SHEET IS THE PROPERTY OF BALLY MFG. CORP. CHICAGO, ILL. THIS INFORMATION IS DISCLOSED IN CONFIDENCE AND IS NOT TO BE COPIED, REPRODUCED REVEALED TO OR APPROPRIATED BY OTHERS, IN PART OR IN WHOLE, WITHOUT THE EXPRESS CONSENT OF THE OWNERS. THE PRINT IS LOANED AND MUST NOT BE USED IN ANY MANNER DETRIMENTAL TO THE INTEREST OF THE OWNERS, AND MUST BE RETURNED ON DEMAND.
REMOVE ALL BURRS
TOLERANCES ON DIMENSIONS UNLESS OTHERWISE SPECIFIED
FRACTIONS ± .008
DECIMALS ± .003
EXCEPT HOLE DIA'S
ANGLES ± 1/2°
DO NOT SCALE DRAWING
DR. BY M.T. DATE 7-26-72
CK. BY DATE 7-26-72
AP'D BY J.D DATE 9-2-72
AP'D BY DATE 9-2-72
NO. LET. CHANGE DATE BY
Bally MANUFACTURING CORP.
2640 BELMONT AVENUE
CHICAGO, ILLINOIS
1276
PRINT CONTROL
NAME A5 LAMP DRIVER SCHEMATIC
ASSEM. NO. USED
SCALE
MATERIAL BMX
CODE
PART NO. W-1182-44 C

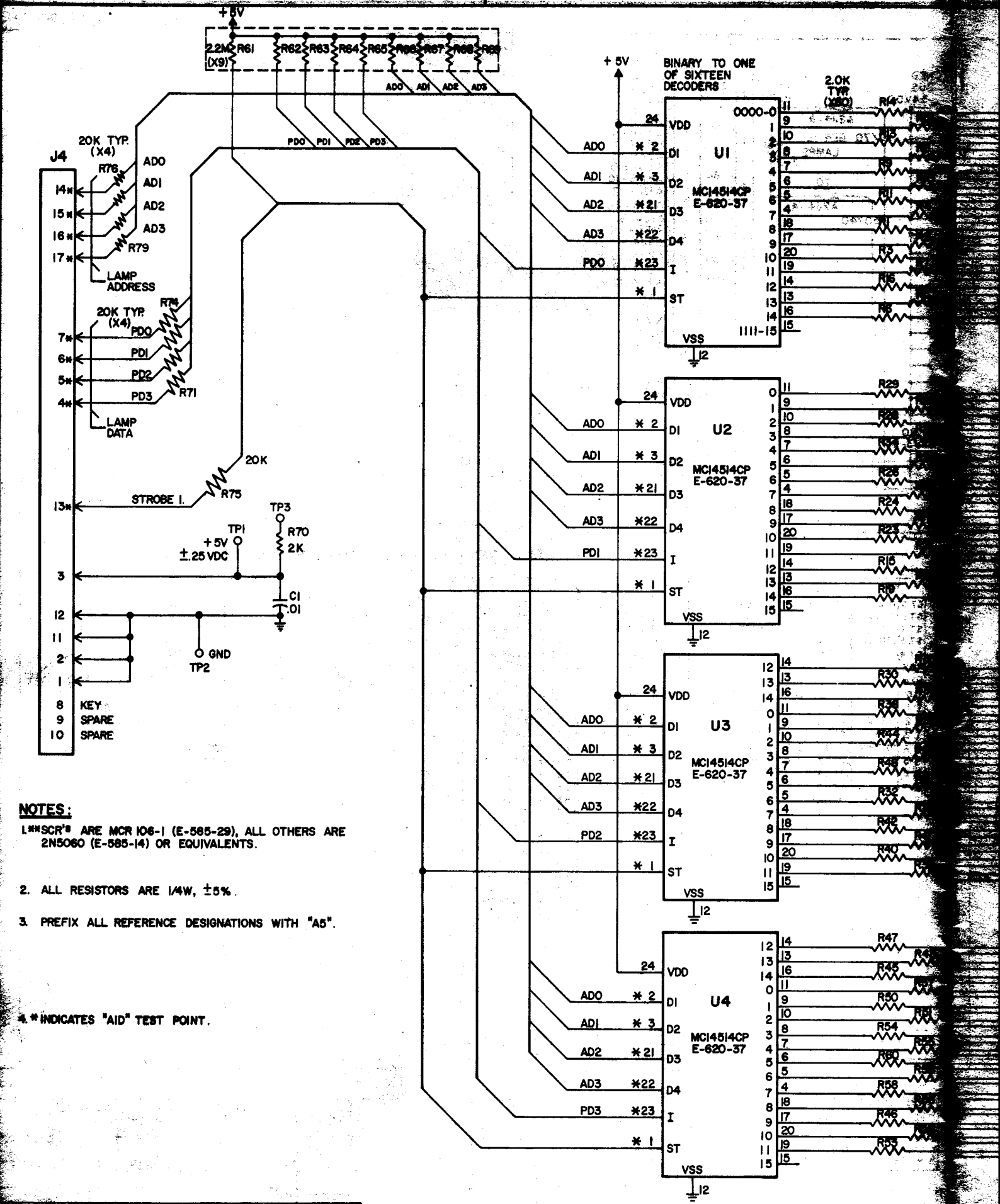

NOTES:

1. **SCR'S ARE MCR 106-1 (E-585-29), ALL OTHERS ARE 2N5060 (E-585-14) OR EQUIVALENTS.

2. ALL RESISTORS ARE 1/4W, ±5%.

3. PREFIX ALL REFERENCE DESIGNATIONS WITH "A5".

4. * INDICATES "AID" TEST POINT.

		DESCRIPTION	TOOL NO.

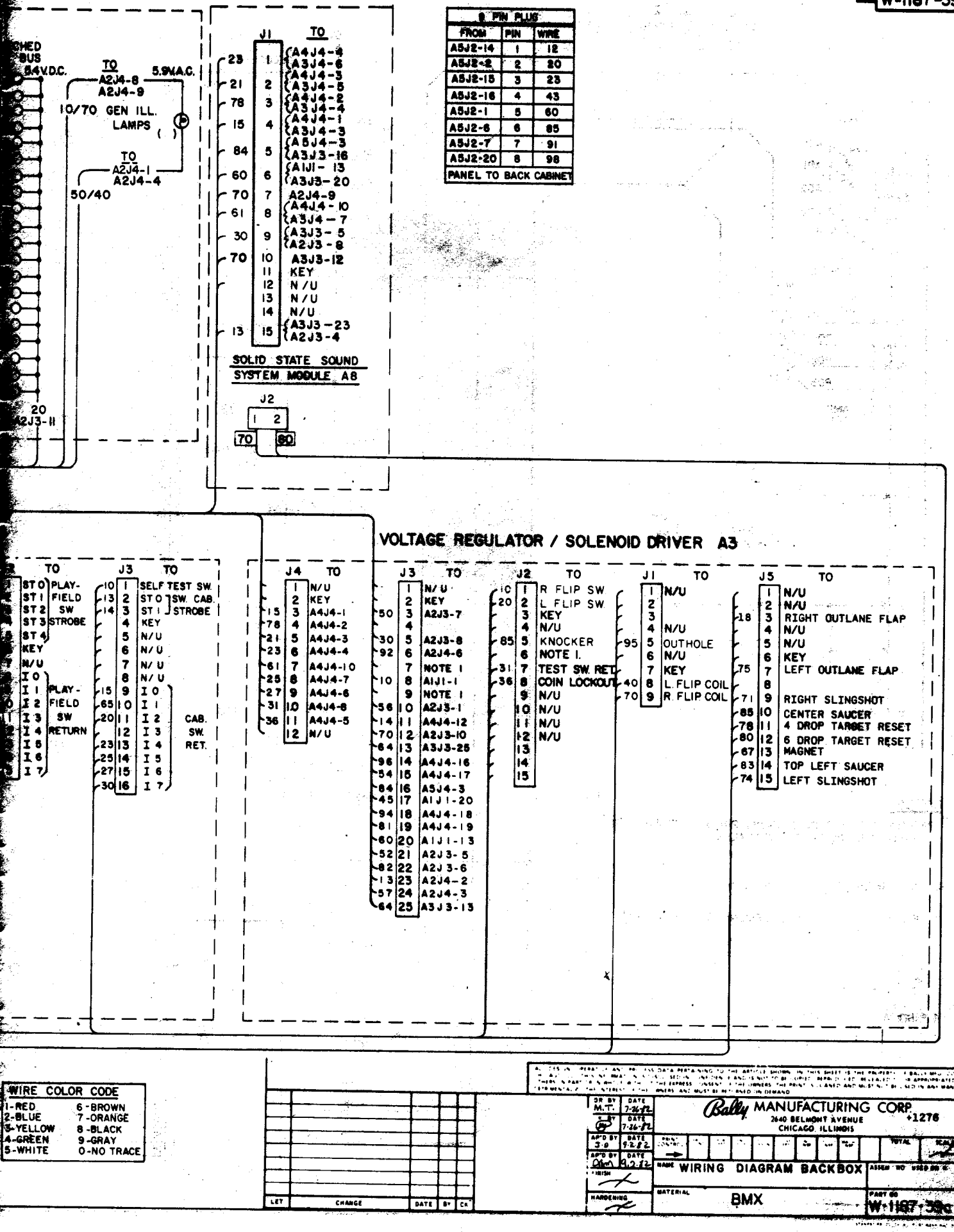

8 PIN PLUG		
FROM	PIN	WIRE
A5J2-14	1	12
A5J2-2	2	20
A5J2-15	3	23
A5J2-16	4	43
A5J2-1	5	60
A5J2-6	6	85
A5J2-7	7	91
A5J2-20	8	98
PANEL TO BACK CABINET		

VOLTAGE REGULATOR / SOLENOID DRIVER A3

	TO
ST 0	PLAY-FIELD SW STROBE
ST 1	
ST 2	
ST 3	
ST 4	
KEY	
N/U	
I 0	PLAY-FIELD SW RETURN
I 1	
I 2	
I 3	
I 4	
I 5	
I 6	
I 7	

J3	TO	
10 1	SELF TEST SW.	
13 2	ST 0	SW. CAB.
14 3	ST 1	STROBE
4	KEY	
5	N/U	
6	N/U	
7	N/U	
8	N/U	
15 9	I 0	CAB. SW. RET.
65 10	I 1	
20 11	I 2	
12	I 3	
23 13	I 4	
25 14	I 5	
27 15	I 6	
30 16	I 7	

J4	TO
1	N/U
2	KEY
15 3	A4J4-1
78 4	A4J4-2
21 5	A4J4-3
23 6	A4J4-4
61 7	A4J4-10
25 8	A4J4-7
27 9	A4J4-6
31 10	A4J4-8
36 11	A4J4-5
12	N/U

J3	TO
1	N/U
2	KEY
50 3	A2J3-7
4	
30 5	A2J3-8
92 6	A2J4-6
7	NOTE 1
10 8	A1J1-1
9	NOTE 1
56 10	A2J3-1
14 11	A4J4-12
70 12	A2J3-10
64 13	A3J3-25
96 14	A4J4-16
54 15	A4J4-17
84 16	A5J4-3
45 17	A1J1-20
94 18	A4J4-18
81 19	A4J4-19
60 20	A1J1-13
52 21	A2J3-5
82 22	A2J3-6
13 23	A2J4-2
57 24	A2J4-3
64 25	A3J3-13

J2	TO
10 1	R FLIP SW
20 2	L FLIP SW
3	KEY
4	N/U
85 5	KNOCKER
6	NOTE 1.
31 7	TEST SW. RET.
36 8	COIN LOCKOUT
9	N/U
10	N/U
11	N/U
12	N/U
13	
14	
15	

J1	TO
1	N/U
2	
3	
4	N/U
95 5	OUTHOLE
6	N/U
7	KEY
40 8	L FLIP COIL
70 9	R FLIP COIL

J5	TO
1	N/U
2	N/U
18 3	RIGHT OUTLANE FLAP
4	N/U
5	N/U
6	KEY
75 7	LEFT OUTLANE FLAP
8	
71 9	RIGHT SLINGSHOT
85 10	CENTER SAUCER
78 11	4 DROP TARGET RESET
80 12	6 DROP TARGET RESET
67 13	MAGNET
83 14	TOP LEFT SAUCER
74 15	LEFT SLINGSHOT

WIRE COLOR CODE	
1-RED	6-BROWN
2-BLUE	7-ORANGE
3-YELLOW	8-BLACK
4-GREEN	9-GRAY
5-WHITE	0-NO TRACE

LET	CHANGE	DATE	BY	CK

ALL THIS IN PRINT AND ALL DATA PERTAINING TO THE ARTICLE SHOWN IN THIS SHEET IS THE PROPERTY OF BALLY MFG. CORP. AND IS NOT TO BE USED, REPRODUCED OR DISCLOSED IN ANY MANNER WITHOUT THE EXPRESS CONSENT OF THE OWNERS. THE PRINT IS LOANED AND MUST BE RETURNED ON DEMAND.

DR BY M.T. DATE 7-26-72
CH BY DATE 7-26-72
APP'D BY J.G DATE 9-2-72
APP'D BY DATE 9.2.72
FINISH
HARDENING

Bally MANUFACTURING CORP.
2640 BELMONT AVENUE CHICAGO, ILLINOIS +1276

SCALE TOTAL

NAME WIRING DIAGRAM BACKBOX
ASSEM NO
MATERIAL BMX
PART NO W-1187-39c

TABLE A A1J2

FROM	PIN	WIRE
A2J3-11	1	20
A5J2-14	2	12
A2J2-1	3	50
A2J4-8	4	10
A5J2-23	5	97
A5J2-15	6	23
A5J2-22	7	62
A5J2-8	8	70
A5J2-1	9	60
A5J2-2	10	20
A5J2-11	11	95
A5J2-21	12	47
A5J2-10	13	35
A5J2-7	14	91
A5J2-6	15	85
A5J2-20	16	98
A5J2-16	17	43
A2J4-4	18	40
A2J2-9	19	70
	20	
	21	
	22	
	23	
A8J1-7	24	70

INSERT TO BACK CAB. PLUG

A1 INSERT

TO	(PLAYER 1) 1A1 J1	(PLAYER 2) 2A1 J1	(PLAYER 3) 3A1 J1	(PLAYER 4) 4A1 J1	CREDIT DISPLAY 5A1 J1
10 — A5J3-8	1	1	1	1	1
N/U	2	2	2	2	2
N/U	3	3	3	3	3
80 — A4J1-1	4	4	4	4	4
20 — A4J1-2	5	5	5	5	5
30 — A4J1-3	6	6	6	6	6
40 — A4J1-4	7	7	7	7	7
50 — A4J1-5	8	8	8	8	8
58 — A4J1-6	9	9	9	9	9
70 — A4J1-10	10	10	10	10	10
N/U	11	11	11	11	11
84 A4J1-7	12	12	12	12	12
60 — A3J3-20	13	13	13	13	13
KEY	14	14	14	14	KEY 14
85 — A4J1-20	15	31 15	72 15	67 15	18 15
54 — A4J1-28	16	16	16	16	16
38 — A4J1-27	17	17	17	17	17
25 — A4J1-26	18	18	18	18	18
51 — A4J1-25	19	19	19	19	19
45 — A3J3-17	20	20	20	20	20

A4J1-21 A4J1-22 A4J1-23 A4J1-24

TO		
84N/U	12	A5J2-14
	23	A5J2-15
	20	A5J2-2
	60	A5J2-1
	47	A5J2-21 SHOOT AGAIN
	95	A5J2-11 GAME OVER
	35	A5J2-10 TILT
	34	A5J2-16
	98	A5J2-20
	85	A5J2-6
	91	A5J2-7
	97	A5J2-23 HIGH SCORE
	70	A5J2-8 MATCH
	62	A5J2-22 BALL IN PLAY
	84	A5J2-3
	72	A5J2-4
		A5J2-5 NOTE 1
		A5J2-9 NOTE 1
	61	A5J2-12
	53	A5J2-13

SWITCHED ILL. BUS 5.4 V.D.C.

20 A2J3-11

A1J2 SEE TABLE A

LAMP DRIVER A5

J4		TO
51	1	A2J3-3
18	2	A2J3-2
84	3	A3J3-16
74	4	A4J1-19
71	5	A4J1-18
23	6	A4J1-17
63	7	A4J1-16
	8	KEY
	9	N/U
	10	N/U
58	11	A2J3-4
	12	SPARE GND
75	13	A4J1-11
32	14	A4J1-15
13	15	A4J1-14
45	16	A4J1-13
48	17	A4J1-12

J2		TO
60	1	UPPER 3 TAR. (LEFT)
20	2	UPPER 3 TAR. (MIDDLE)
	3	N/U
	4	N/U
	5	N/U
85	6	LOWER 3 TAR. (MIDDLE)
91	7	LOWER 3 TAR. (LEFT)
70	8	MATCH
	9	N/U
35	10	TILT
95	11	GAME OVER
	12	N/U
	13	N/U
12	14	CENTER SAUCER (15)
23	15	UPPER 3 TAR. (RIGHT)
43	16	CENTER SAUCER (20)
	17	N/U
	18	KEY
	19	N/U
98	20	LOWER 3 TAR. (RIGHT)
47	21	SHOOT AGAIN
62	22	BALL IN PLAY
97	23	HIGH SCORE TO DATE

J1		TO
41	1	"R" 25K GREEN WHEEL
52	2	"B" 25K BLUE WHEEL
45	3	"N" 25K AMBER WHEEL
	4	N/U
48	5	3X ARROW
25	6	6 DROP TAR.(B) 20K
34	7	6 DROP TAR. LEFT(F) 20K
51	8	"J" 25K AMBER WHEEL
43	9	"V" 25K GREEN WHEEL
23	10	"F" 25K BLUE WHEEL
65	11	2 LEFT R.O. BUTTONS
61	12	4 DROP TAR. #2
30	13	6 DROP TAR.(C) 150K
67	14	"A" 5K BLUE WHEEL
13	15	"E" 5K BLUE WHEEL
15	16	6 DROP TAR.(E) 100K
57	17	"I" 5K AMBER WHEEL
58	18	"O" 5K GREEN WHEEL
60	19	"U" 5K GREEN WHEEL
	20	KEY
	21	N/U
	22	N/U
12	23	"N" 5K AMBER WHEEL
50	24	2X ARROW
75	25	2 RIGHT R.O. BUTTONS
47	26	SAME PLAYER S.A.
53	27	4 DROP TAR. #1 RIGHT
78	28	6 DROP TAR. RIGHT (A 100K

J3		TO
10	1	"T" 10K GREEN WHEEL
95	2	6 DROP TAR.(D) 20K
81	3	"R" 10K BLUE WHEEL
14	4	TARGET 3X
	5	N/U
	6	N/U
	7	N/U
	8	KEY
15	9	"S" 10K BLUE WHEEL
91	10	3X SCORE
20	11	"P" 10K AMBER WHEEL
21	12	"X" 10K GREEN WHEEL
35	13	CREDIT INDICATOR
84	14	4 DROP TAR. #4 (LEFT)
53	15	"L" 10K AMBER WHEEL
25	16	"G" 5K BLUE WHEEL
13	17	"D" 5K AMBER WHEEL
56	18	"Y" WHEEL SPECIAL
67	19	"K" 5K AMBER WHEEL
80	20	6 DT. EK BALL ARROW
64	21	2X SCORE
23	22	CENTER SAUCER (SPEC)
98	23	"G" 5K BLUE WHEEL
72	24	4 DROP TAR. #3
36	25	"W" 5K GREEN WHEEL
38	26	"S" 5K GREEN WHEEL
40	27	TARGET 2X
	28	N/U

MPU A4

J5		TEST CONNECTOR
	1	D7
	2	D6
	3	D5
	4	D4
	5	D3
	6	D2
	7	D1
	8	D0
	9	A13
	10	A12
	11	A11
	12	A10
	13	A9
	14	A8
	15	A7
	16	A6
	17	A5
	18	A4
	19	A3
	20	A2
	21	A1
	22	A0
	23	R/W
	24	HLT
	25	RES
	26	VMA
	27	Φ 2
	28	EX MEM.
	29	KEY
	30	+ 5 V.D.C.
	31	GND
	32	A4U11-18

J1		TO
80	1	A1J1-4
20	2	A1J1-5
30	3	A1J1-6
40	4	A1J1-7
50	5	A1J1-8
58	6	A1J1-9
84	7	A1J1-12
	8	
	9	KEY
70	10	A1J1-10
75	11	A5J4-13
48	12	A5J4-17
45	13	A5J4-16
13	14	A5J4-15
32	15	A5J4-14
63	16	A5J4-7
23	17	A5J4-6
71	18	A5J4-5
74	19	A5J4-4
85	20	1 A1J1-15
31	21	2 A1J1-15
72	22	3 A1J1-15
67	23	4 A1J1-15
18	24	5 A1J1-15
51	25	A1J1-19
25	26	A1J1-18
38	27	A1J1-17
54	28	A1J1-16

J4		TO
15	1	A3J4-3
78	2	A3J4-4
21	3	A3J4-5
23	4	A3J4-6
36	5	A3J4-11
27	6	A3J4-9
25	7	A3J4-8
31	8	A3J4-10
	9	N/U
61	10	A3J4-7
	11	N/C
14	12	A3J3-11
	13	N/C
	14	KEY
90	15	A2J3-9
96	16	A3J3-14
54	17	A3J3-15
94	18	A3J3-18
81	19	A3J3-19

J2		TO
	1	ST 0
	2	ST 1
	3	ST 2
	4	ST 3
	5	ST 4
	6	KEY
	7	N/U
	8	I 0
	9	I 1
	10	I 2
	11	I 3
	12	I 4
	13	I 5
	14	I 6
	15	I 7

TO LOWER CABINET

TO PLAYFIELD

NOTES:

1. THESE PINS ARE RESERVED FOR FUTURE USE.
2. WIRE COLOR ARE SHOWN FOR ALL CONNECTOR PINS, SOME WIRE MAY NOT BE USED IN ALL GAMES.
3. * INDICATES AID TEST POINT.

WIRE C
1-RED
2-BLUE
3-YELLOW
4-GREEN
5-WHITE

L PART NO. W-1211 c

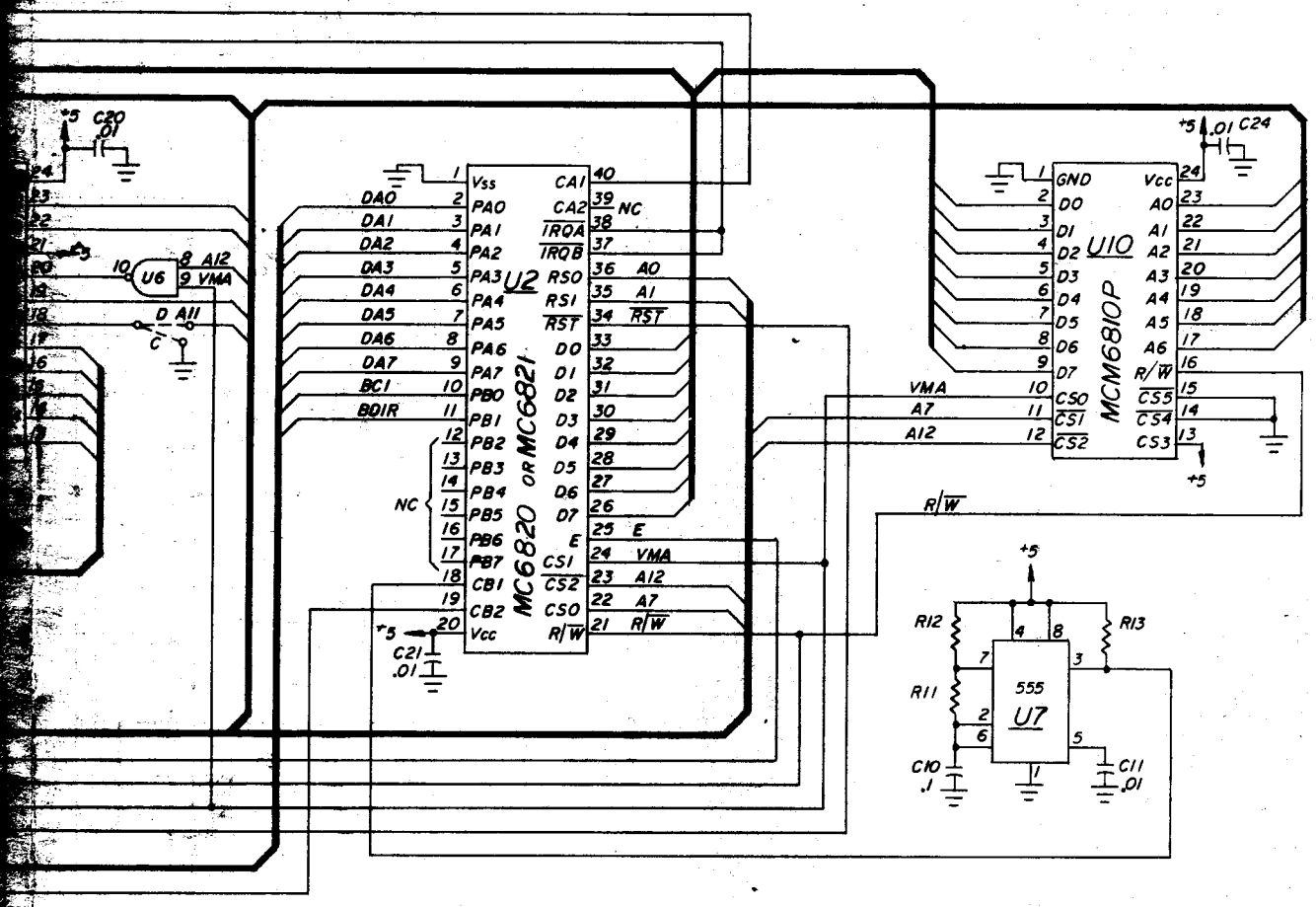

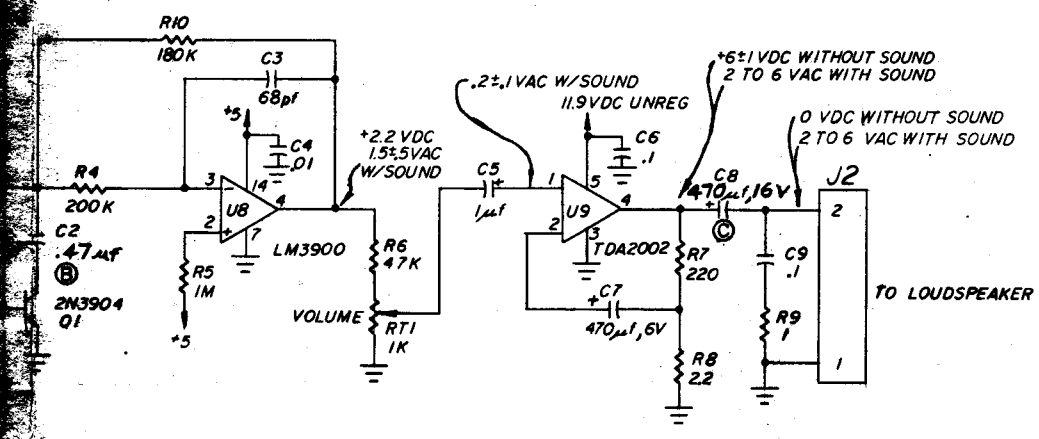

...S USED (6802 WITHOUT U10).
" (6808/6810, U10).
" (G1 9316B INTEL 2716 OR EQUIV.).
" (T1 TMS 2532 TMS 4732 OR EQUIV.).
...ON THIS ASSEMBLY.
...RESISTOR VALUES ARE IN OHMS,
...0'S.
...NS WITH A8.

ALL DESIGN, OPERATIVE AND PROCESS DATA PERTAINING TO THE ARTICLE SHOWN ON THIS SHEET IS THE PROPERTY OF BALLY MFG. CO... CHICAGO, ILL. THIS INFORMATION IS DISCLOSED IN CONFIDENCE AND IS NOT TO BE COPIED, REPRODUCED, REVEALED TO OR APPROPRIATED BY OTH... IN PART OR IN WHOLE, WITHOUT THE EXPRESS CONSENT OF THE OWNERS. THE PRINT IS LOANED AND MUST NOT BE USED IN ANY MAN... DETRIMENTAL TO THE INTEREST OF THE OWNERS, AND MUST BE RETURNED ON DEMAND.

NO.	LET.	CHANGE	DATE	BY
3	C	WAS 220uf 25V	1-29-80	J.D.
2	B	WAS .1	1-29-80	J.D.
1	A	TEST INFO ADDED	12-11-79	NRW

REMOVE ALL BURRS
TOLERANCES ON DIMENSIONS UNLESS OTHERWISE SPECIFIED
FRACTIONS ± .008
DECIMALS ± .003
EXCEPT HOLE DIA.'S
ANGLES ± 1/2°
DO NOT SCALE DRAWING

DR. BY NRW DATE 9-13-79
CK. BY DBM DATE 9-19-79
APP'D BY DATE 9-14-79
APP'D BY DATE 9-14-79
FINISH:
HARDENING:

Bally MANUFACTURING CORP.
2640 BELMONT AVENUE
CHICAGO, ILLINOIS
SEP 2? 1979
#1173

PRINT CONTROL | DIE SIZE | C.C. | FT. PER M | LBS. PER M

NAME COMPUTER SOUND MODULE A8 SCHEMATIC
ASSEM. NO. USED AS-2518-51
MATERIAL
CODE
PART NO. W-1211 c

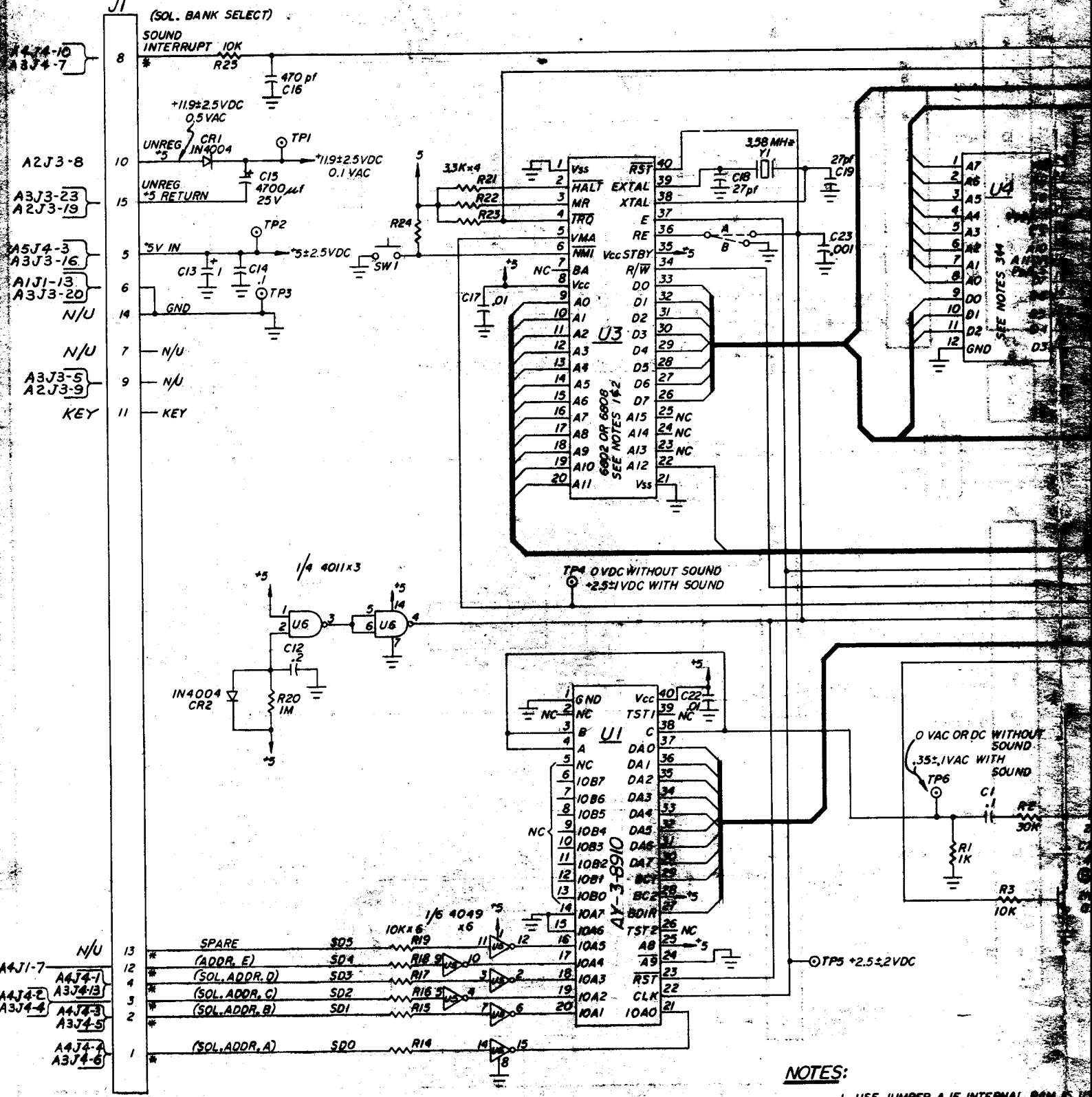

NOTES:

1. USE JUMPER A IF INTERNAL RAM IS US
2. " " B " EXTERNAL " "
3. " " C " 2K ROM (EPROM)
4. " " D " 4K " "
5. U7, R12, R11, R13, C10, C11 NOT USED ON
6. UNLESS OTHERWISE INDICATED, ALL
   ALL CAPACITOR VALUES ARE IN
7. PREFIX ALL REFERENCE DESIGNATI
8. * INDICATES 'AID' TEST POINT.

OPER.	DEPT.	DESCRIPTION	TOOL NO.

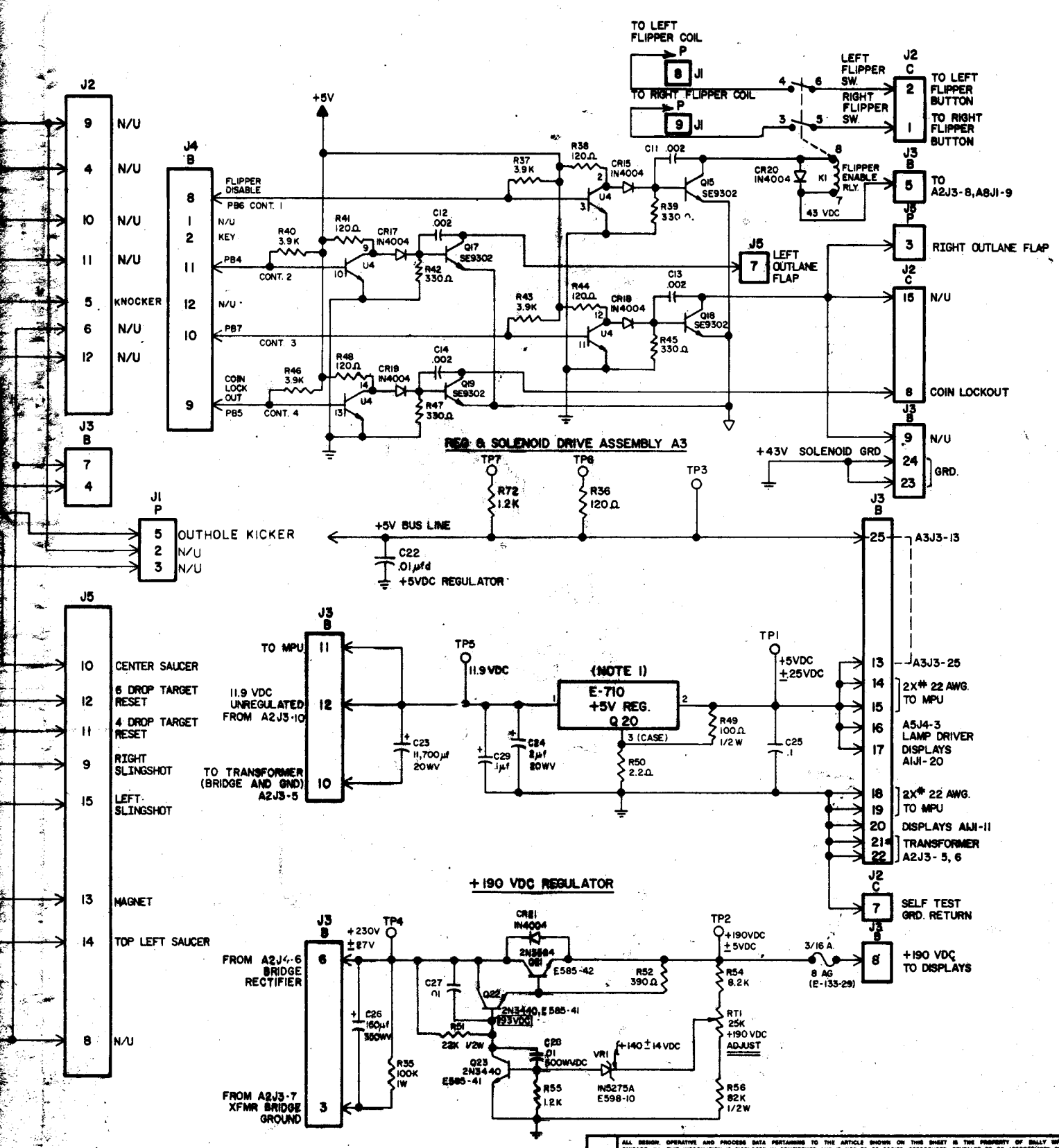

ALL DESIGN, OPERATIVE AND PROCESS DATA PERTAINING TO THE ARTICLE SHOWN ON THIS SHEET IS THE PROPERTY OF BALLY MFG. CORP. CHICAGO, ILL. THIS INFORMATION IS DISCLOSED IN CONFIDENCE AND IS NOT TO BE COPIED, REPRODUCED, DIVULGED TO OR APPROPRIATED BY OTHERS IN PART OR IN WHOLE, WITHOUT THE EXPRESS CONSENT OF THE OWNERS. THIS PRINT IS LOANED AND MUST NOT BE USED IN ANY MANNER DETRIMENTAL TO THE INTEREST OF THE OWNERS, AND MUST BE RETURNED ON DEMAND.

NO.	LET.	CHANGE	DATE	BY

REMOVE ALL BURRS
TOLERANCES ON DIMENSIONS UNLESS OTHERWISE SPECIFIED
FRACTIONS ± .008
DECIMALS ± .003
EXCEPT HOLE DIA ± .002
ANGLES ± 1°
DO NOT SCALE DRAWING

DR. BY M.T.	DATE 7-24-82	
CH. BY	DATE 7-24-82	
APP'D BY S.D.	DATE 9.2.82	
APP'D BY	DATE 11-3-82	

Bally MANUFACTURING CORP.
2640 BELMONT AVENUE
CHICAGO, ILLINOIS
1276

PRINT CONTROL

NAME: SOLENOID DRIVER VOLTAGE REGULATOR SCHEMATIC
ASSEM. NO. USED:
SCALE: NONE

MATERIAL CODE: BMX

PART NO. W-1183-43 C

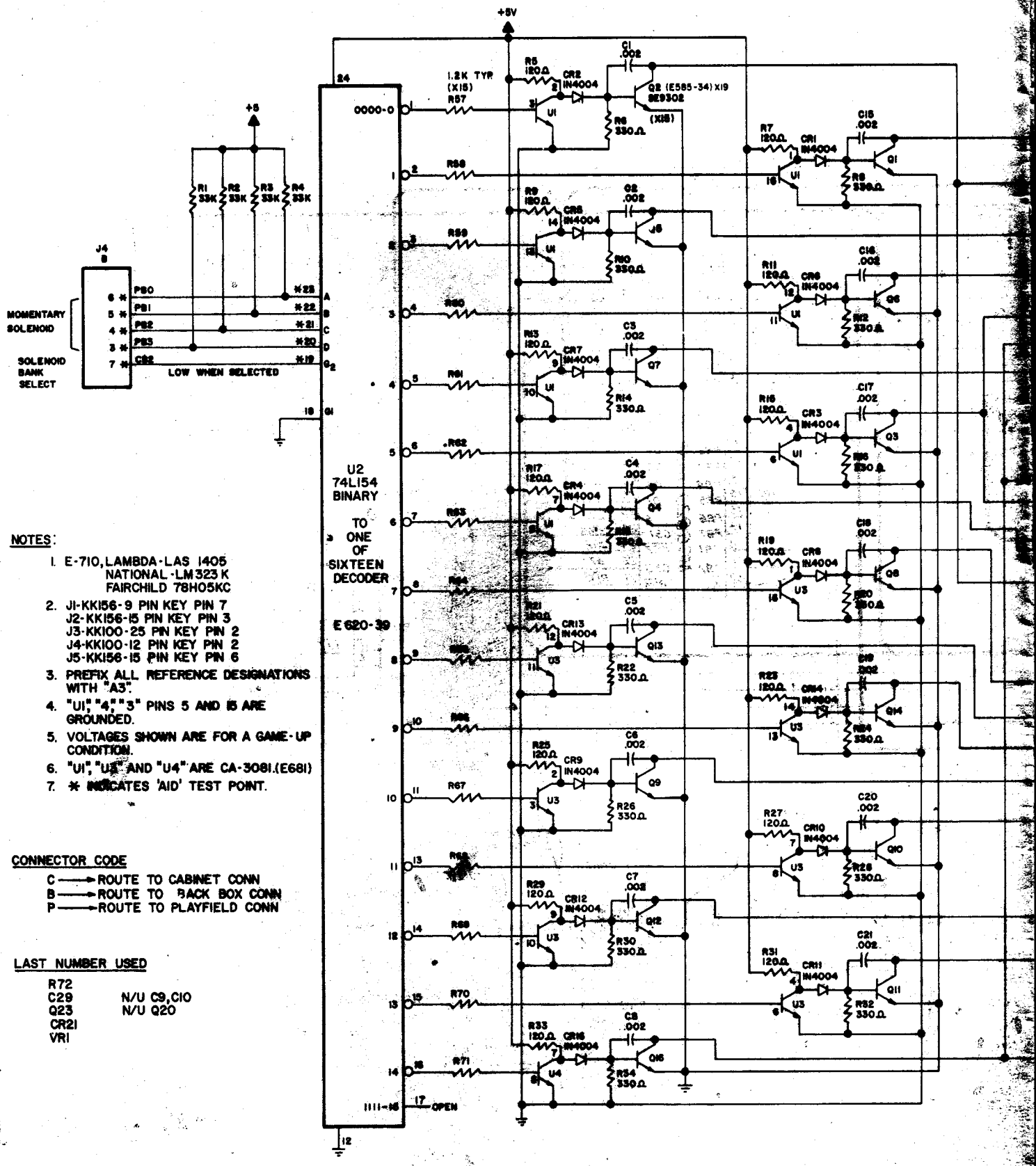

NOTES:

1. E-710, LAMBDA-LAS 1405
   NATIONAL-LM323K
   FAIRCHILD 78H05KC
2. J1-KK156-9 PIN KEY PIN 7
   J2-KK156-15 PIN KEY PIN 3
   J3-KK100-25 PIN KEY PIN 2
   J4-KK100-12 PIN KEY PIN 2
   J5-KK156-15 PIN KEY PIN 6
3. PREFIX ALL REFERENCE DESIGNATIONS WITH "A3".
4. "U1", "4", "3" PINS 5 AND 15 ARE GROUNDED.
5. VOLTAGES SHOWN ARE FOR A GAME-UP CONDITION.
6. "U1", "U3" AND "U4" ARE CA-3081.(E681)
7. * INDICATES 'AID' TEST POINT.

CONNECTOR CODE

C ——→ ROUTE TO CABINET CONN
B ——→ ROUTE TO BACK BOX CONN
P ——→ ROUTE TO PLAYFIELD CONN

LAST NUMBER USED

R72	
C29	N/U C9, C10
Q23	N/U Q20
CR21	
VR1	

OPER.	DEPT.	DESCRIPTION	TOOL NO.

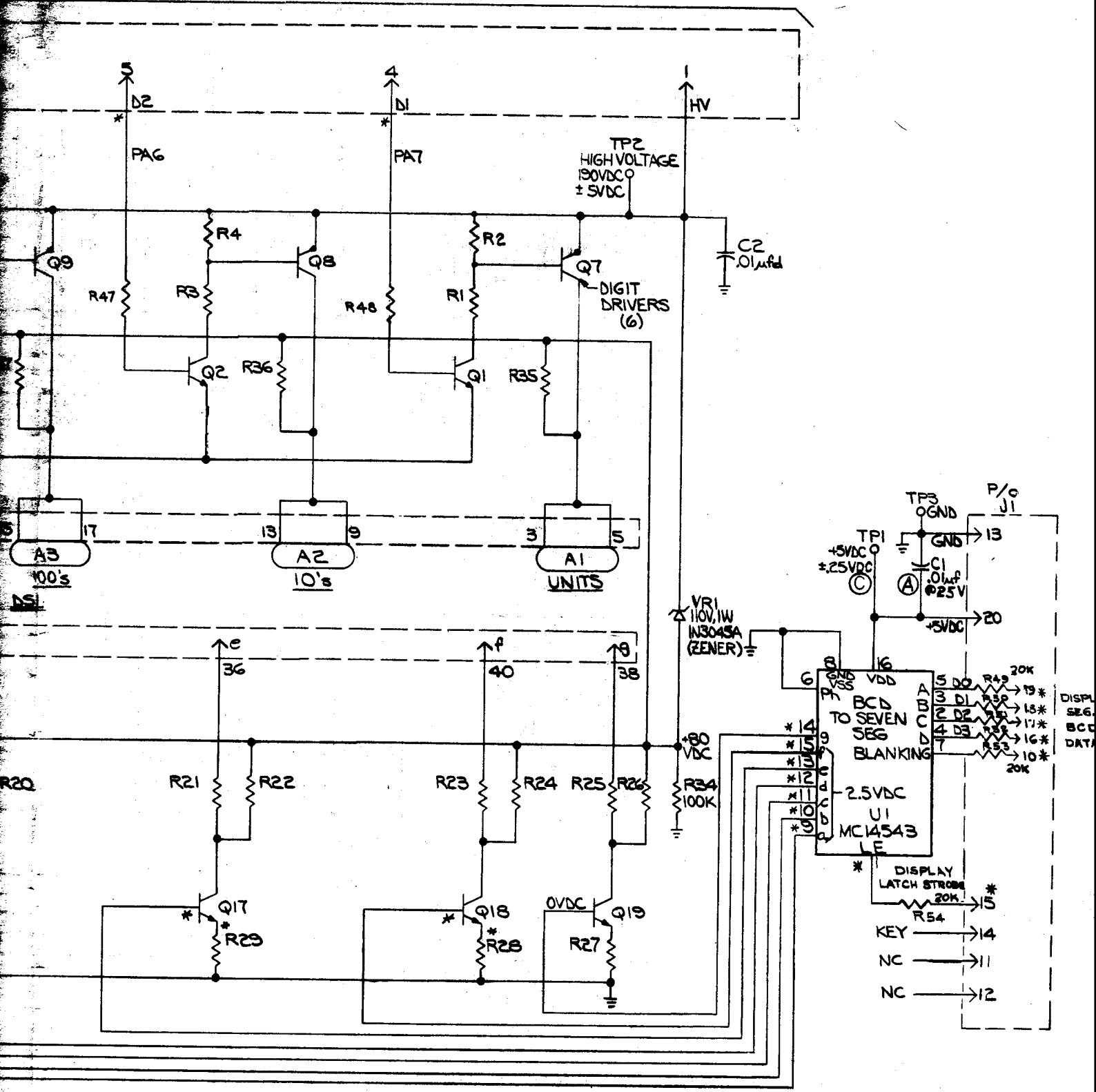

DIE SIZE — C.C. — FT. PER M — LBS. PER M —

ALL DESIGN, OPERATIVE AND PROCESS DATA PERTAINING TO THE ARTICLE SHOWN ON THIS SHEET IS THE PROPERTY OF BALLY MFG. CORP. CHICAGO, ILL. THIS INFORMATION IS DISCLOSED IN CONFIDENCE AND IS NOT TO BE COPIED, REPRODUCED, REVEALED TO OR APPROPRIATED BY OTHERS, IN PART OR IN WHOLE, WITHOUT THE EXPRESS CONSENT OF THE OWNERS. THE PRINT IS LOANED AND MUST NOT BE USED IN ANY MANNER DETRIMENTAL TO THE INTEREST OF THE OWNERS, AND MUST BE RETURNED ON DEMAND.

NO.	LET.	CHANGE	DATE	BY	CK.
3	C	WAS VAC	6-20-80		J.D
2	B	WAS 1K	3-29-80		J.D
1	A	WAS 500V	4-1-79		J.D

REMOVE ALL BURRS

TOLERANCES ON DIMENSIONS UNLESS OTHERWISE SPECIFIED
FRACTIONS ±
DECIMALS ±
ANGLES ±

DO NOT SCALE DRAWING

DR. BY: D.G. DATE: 2-2-77
CH. BY: [illegible] DATE: 12-8-77
APP'D BY: [illegible] DATE: 10/14/77
APP'D BY: [illegible] DATE: 10/17/77
FINISH: N
MASKING:

Bally MANUFACTURING CORP. 1/120-6
NOV 1 8 1977
2640 BELMONT AVENUE
CHICAGO, ILLINOIS
PCC M. WESTLES

PRINT CONTROL | DIM. | CAP. | RES. | INDUC. | SEMI. | TRANS. | DIODE | | TOTAL | SCALE
N

NAME: 6 DIGIT DISPLAY BOARD SCHEMATIC "A1"
ASSEM. NO. USED ON/IN: AS-2518-21
MATERIAL:
PART NO. W-1184-1e

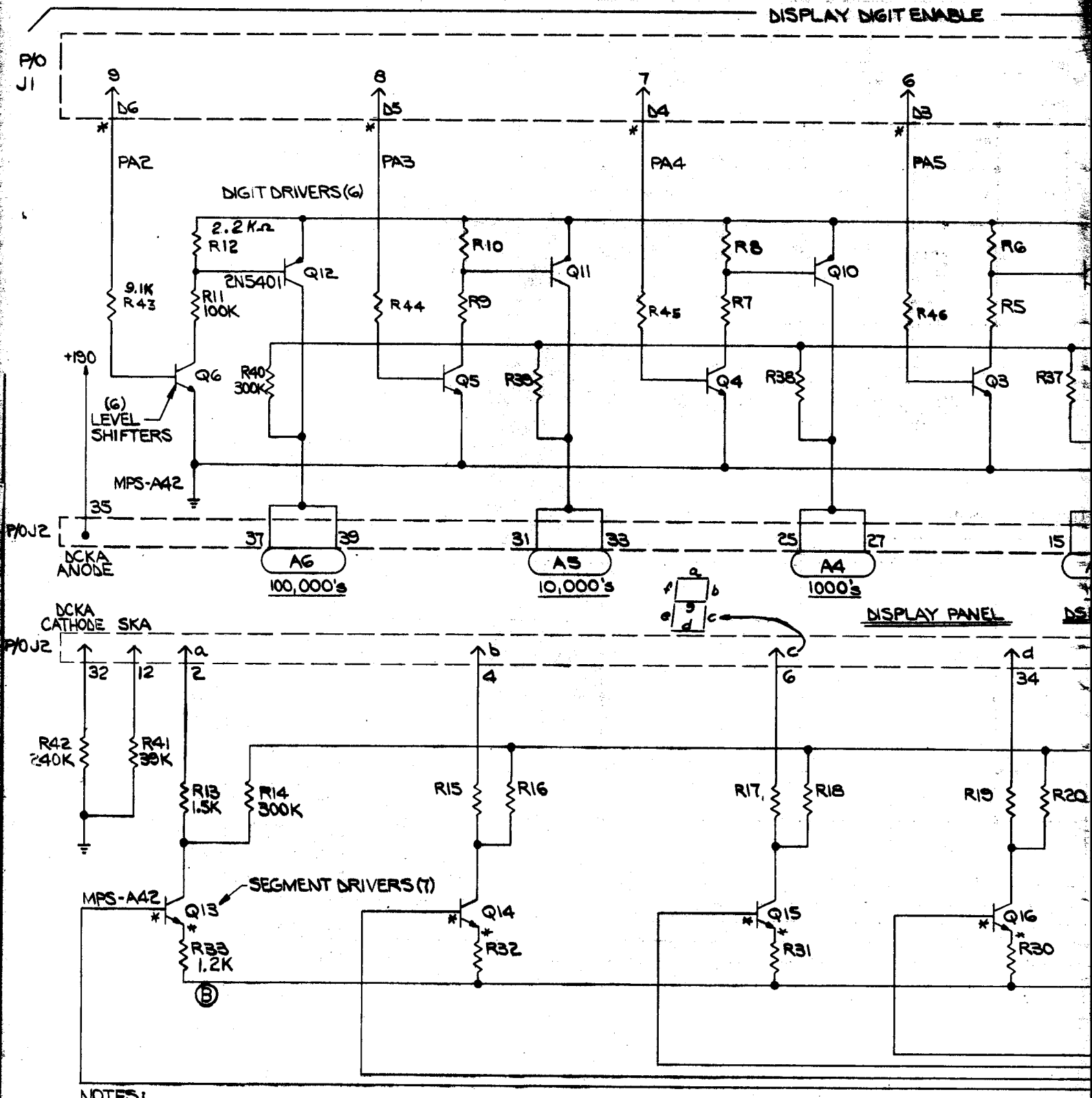

NOTES:

1. UNLESS OTHERWISE SPECIFIED ALL RESISTORS ARE ± 5%, 1/4W.
2. PREFIX ALL REFERENCE DESIG. WITH ASSEMBLY REFERENCE DESIG. "A1"
3. * INDICATES 'A10' TEST POINT.

GPER.	DEPT.	DESCRIPTION	TOOL No.

PART NO. W-1184

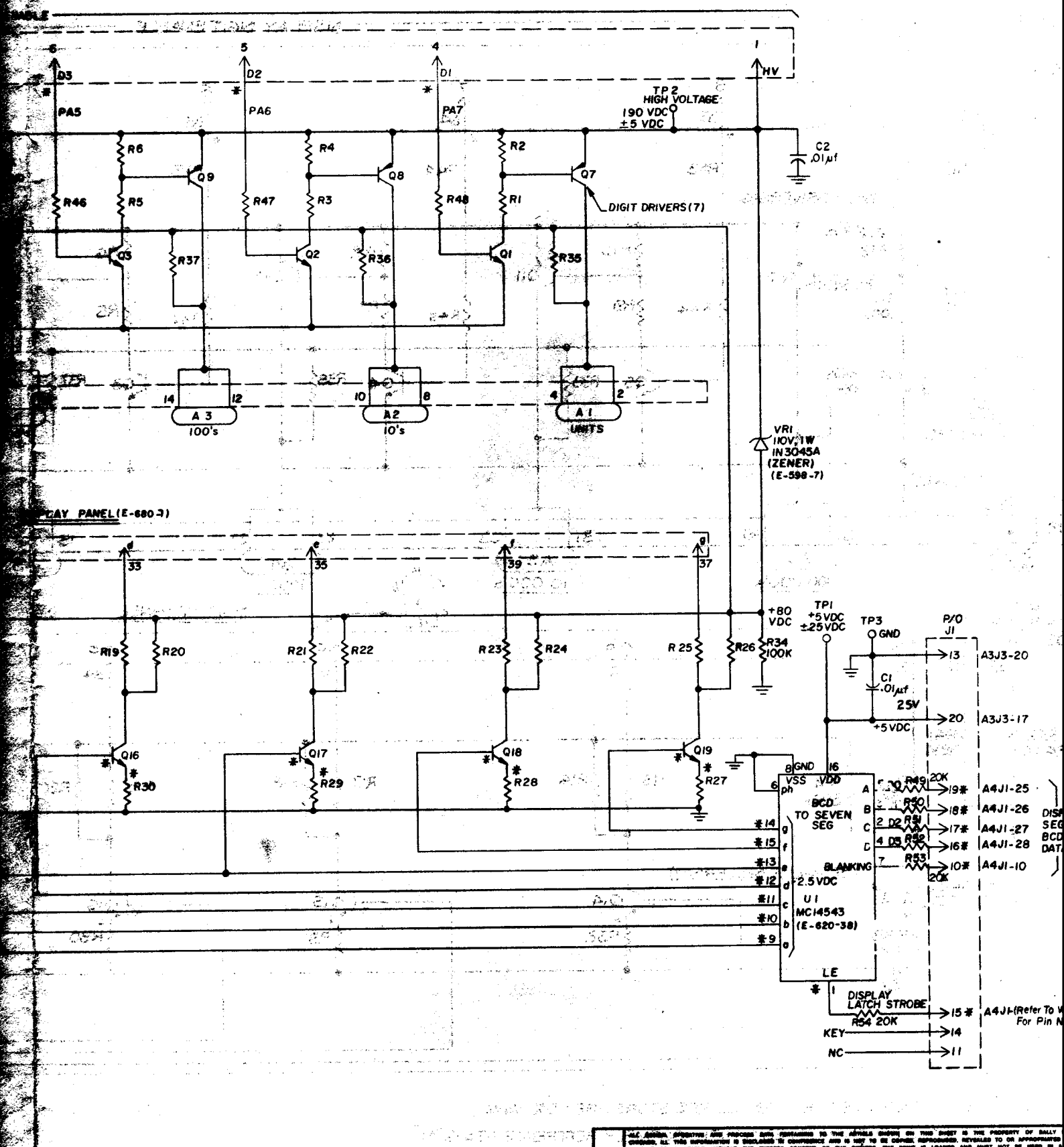

ALL IDEAS, DESIGNS AND PROCESS WHICH PERTAINING TO THE ARTICLES SHOWN ON THIS SHEET IS THE PROPERTY OF BALLY CONSOLE, ALL THIS INFORMATION IS DISCLOSED IN CONFIDENCE AND IS NOT TO BE COPIED, REPRODUCED, REVEALED TO OR APPROPRIATED IN PART OR IN WHOLE, WITHOUT THE EXPRESS CONSENT OF THE OWNERS. THE PRINT IS LOANED AND MUST NOT BE USED IN ANY DETRIMENTAL TO THE INTEREST OF THE OWNERS, AND MUST BE RETURNED ON DEMAND.

NO.	LST.	CHANGE	DATE	BY

REMOVE ALL BURRS
TOLERANCES ON DIMENSIONS UNLESS OTHERWISE SPECIFIED
FRACTIONS ± .008
DECIMALS ± .003
EXCEPT HOLE DIA. .5
ANGLES ± 1/2°
DO NOT SCALE DRAWING

DR. BY	FFC	DATE 6-18-80
CK. BY	JMCR	DATE 6-19-80
APP'D BY		DATE
MFG BY		DATE
FINISH:		
HARDENING:		

Bally MANUFACTURING CORP.
2640 BELMONT AVENUE
CHICAGO, ILLINOIS

PRINT CONTROL | DIE SIZE- | C.C.- | FT. PER M- | LBS. PER M-

NAME 7 DIGIT DISPLAY BOARD SCHEMATIC "A1"

ASSEM. NO. USED ON AS-2518-

MATERIAL

CODE

PART NO. W-1184-2

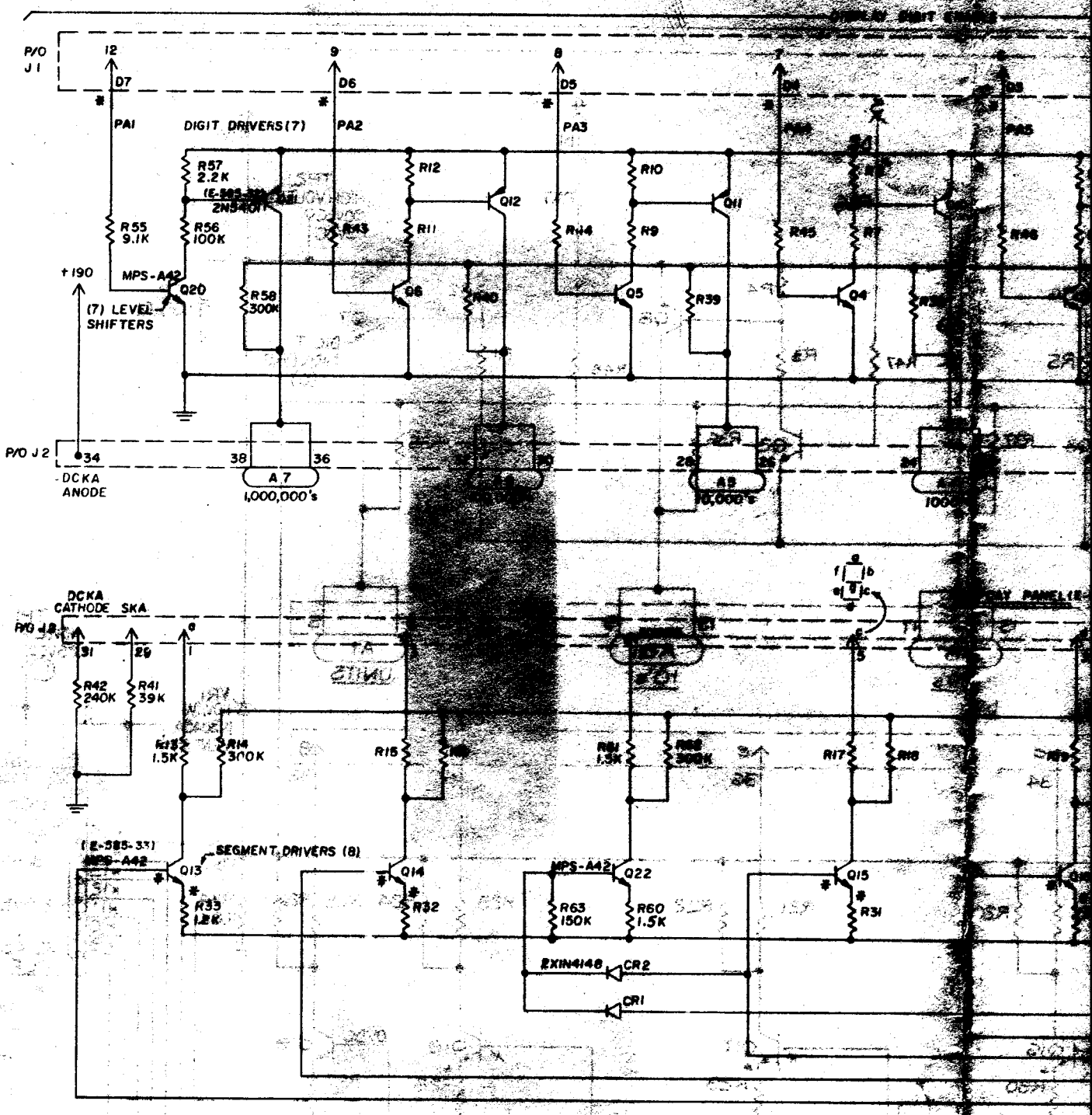

* INDICATES "AID" TEST POINT.

NOTES:

1. UNLESS OTHERWISE SPECIFIED ALL RESISTORS ARE ± 5 %, ½ w.
2. PREFIX ALL REFERENCE DESIG. WITH ASSEMBLY REFERENCE DESIG. "A 1".

DESCRIPTION	TOOL NO.

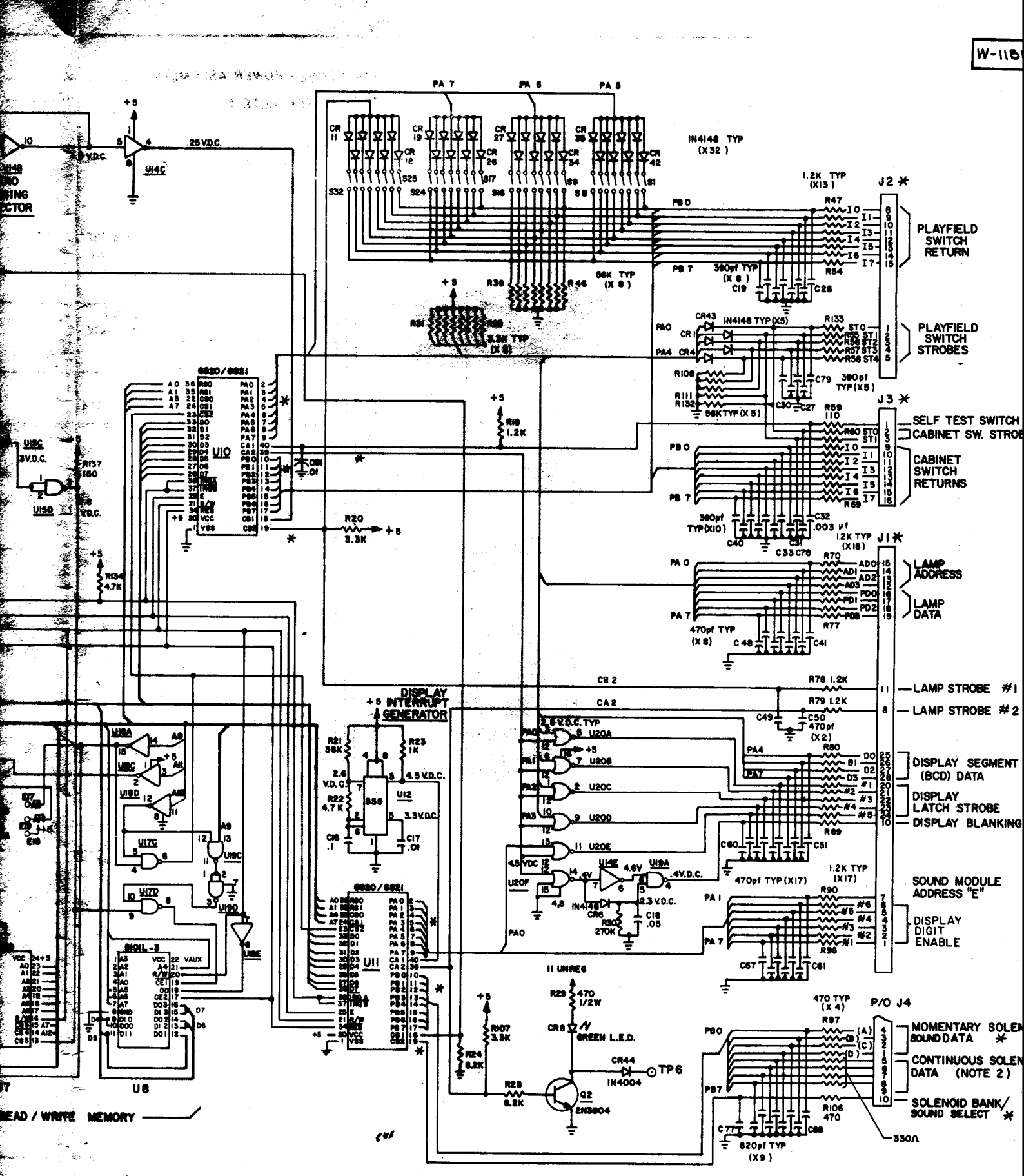

ALL DESIGN, OPERATIVE AND PROCESS DATA PERTAINING TO THE ARTICLE SHOWN ON THIS SHEET IS THE PROPERTY OF BALLY MFG. CO. CHICAGO, ILL. THIS INFORMATION IS DISCLOSED IN CONFIDENCE AND IS NOT TO BE COPIED, REPRODUCED, REVEALED TO OR APPROPRIATED BY OTHERS, IN PART OR IN WHOLE, WITHOUT THE EXPRESS CONSENT OF THE OWNERS. THE PRINT IS LOANED AND MUST NOT BE USED IN ANY DETRIMENTAL TO THE INTEREST OF THE OWNERS, AND MUST BE RETURNED ON DEMAND.

No.	LET.	CHANGE	DATE	BY	CK.
1	A	A9 was VCC2 on U1, U2, U6 U10 was CS	12-76	S.T.	

REMOVE ALL BURRS

TOLERANCES ON DIMENSIONS UNLESS OTHERWISE SPECIFIED
FRACTIONS ± 1/64
DECIMALS ± .005
ANGLES ± 1°

DO NOT SCALE DRAWING

DR. BY E.V.	DATE 5-11-78	Bally MANUFACTURING CORP. 2640 BELMONT AVENUE CHICAGO, ILLINOIS
CK. BY BBM	DATE 5-15-78	1119-[illegible]
APP'D BY [illegible]	DATE [illegible]	
APP'D BY [illegible]	DATE [illegible]	
FINISH:		
HARDENING:		

PRINT CONTROL → | TOTAL

NAME: M.P.U. CONTROL BOARD SCHEMATIC

ASSEM. NO. USED ON

MATERIAL

PART NO. W-1181-3

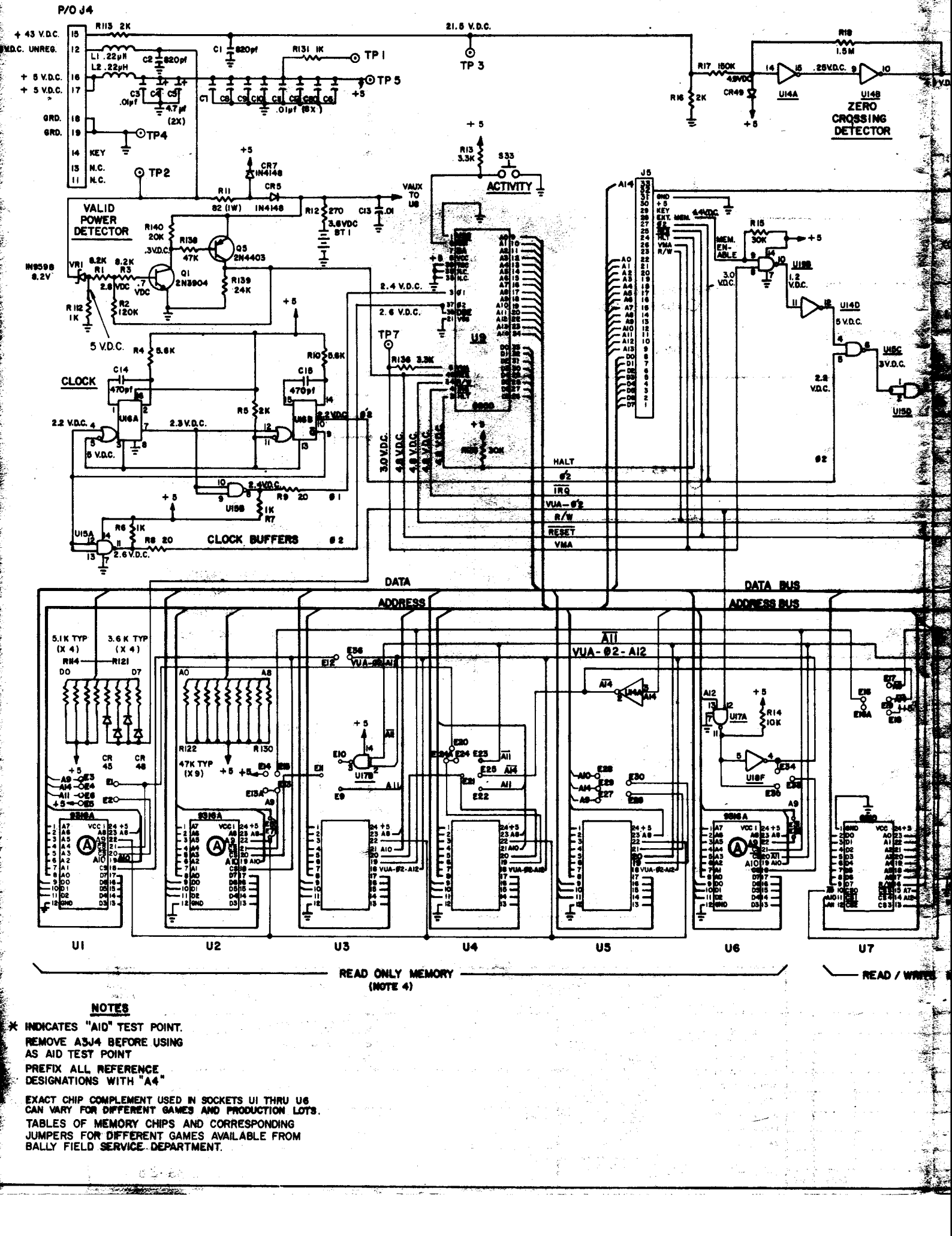

NOTES

* INDICATES "AID" TEST POINT.
REMOVE A3J4 BEFORE USING AS AID TEST POINT
PREFIX ALL REFERENCE DESIGNATIONS WITH "A4"

EXACT CHIP COMPLEMENT USED IN SOCKETS U1 THRU U6 CAN VARY FOR DIFFERENT GAMES AND PRODUCTION LOTS.
TABLES OF MEMORY CHIPS AND CORRESPONDING JUMPERS FOR DIFFERENT GAMES AVAILABLE FROM BALLY FIELD SERVICE DEPARTMENT.

PART NO. W-1233-2b

SSEMBLY

AS-2518-54, POWER MODULE

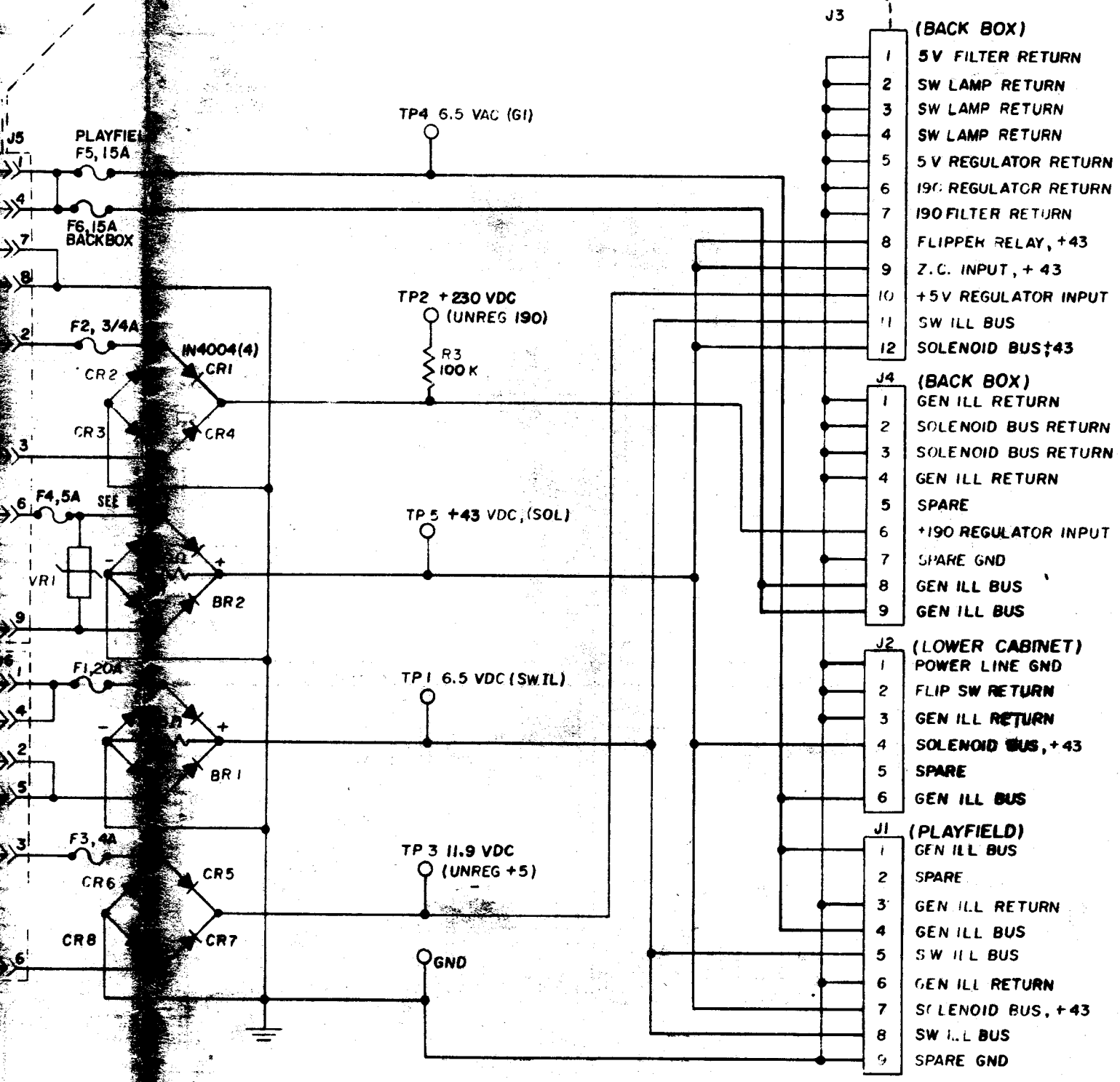

ALL DESIGN, OPERATIVE AND PROCESS DATA PERTAINING TO THE ARTICLE SHOWN ON THIS SHEET IS THE PROPERTY OF BALLY MFG. CORP., CHICAGO, ILL. THIS INFORMATION IS DISCLOSED IN CONFIDENCE AND IS NOT TO BE COPIED, REPRODUCED, REVEALED TO OR APPROPRIATED BY OTHERS, IN PART OR IN WHOLE, WITHOUT THE EXPRESS CONSENT OF THE OWNERS THE PRINT IS LOANED AND MUST NOT BE USED IN ANY MANNER DETRIMENTAL TO THE INTEREST OF THE OWNERS, AND MUST BE RETURNED ON DEMAND.

CHANGE	DATE	BY

REMOVE ALL BURRS

TOLERANCES ON DIMENSIONS UNLESS OTHERWISE SPECIFIED
FRACTIONS ± .008
DECIMALS ± .003
EXCEPT HOLE DIA.'S
ANGLES ± 1/2°

DO NOT SCALE DRAWING

DR. BY FFC	DATE	
CK. BY AMCR	DATE	
APP'D BY S.D	DATE 7-13-82	
APP'D BY	DATE 7-13-82	
FINISH:		
HARDENING:		

Bally MANUFACTURING CORP.
2640 BELMONT AVENUE
CHICAGO, ILLINOIS
1273

PRINT CONTROL	DIE SIZE-	C.C.-	FT. PER M-	LBS. PER M-

NAME: POWER SUPPLY SCHEMATIC

ASSEM. NO. USED:

SCALE:

MATERIAL:

CODE:

PART NO. W-1233-2b

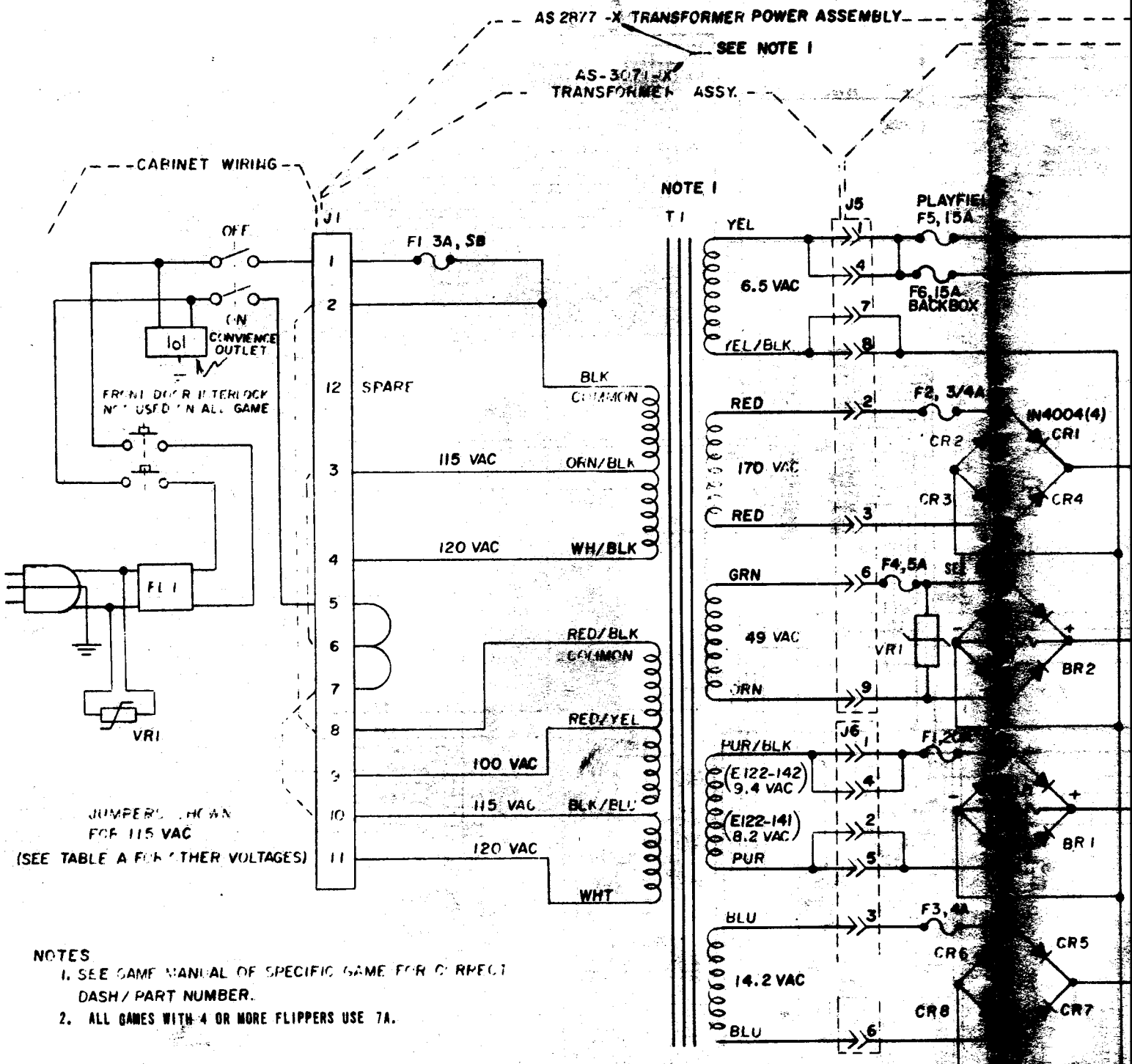

NOTES

1. SEE GAME MANUAL OF SPECIFIC GAME FOR CORRECT DASH / PART NUMBER.
2. ALL GAMES WITH 4 OR MORE FLIPPERS USE 7A.

TABLE A

115 VAC , 2-8 , 3-6 , 7-10
120 VAC . 2-8 , 4-6 , 7-11
220 VAC , 4-8 , 7-9
240 VAC , 4-8 , 7-11

OPER.	DEPT.	DESCRIPTION	TOOL NO.

NO.	LET.	CHANGE	DATE

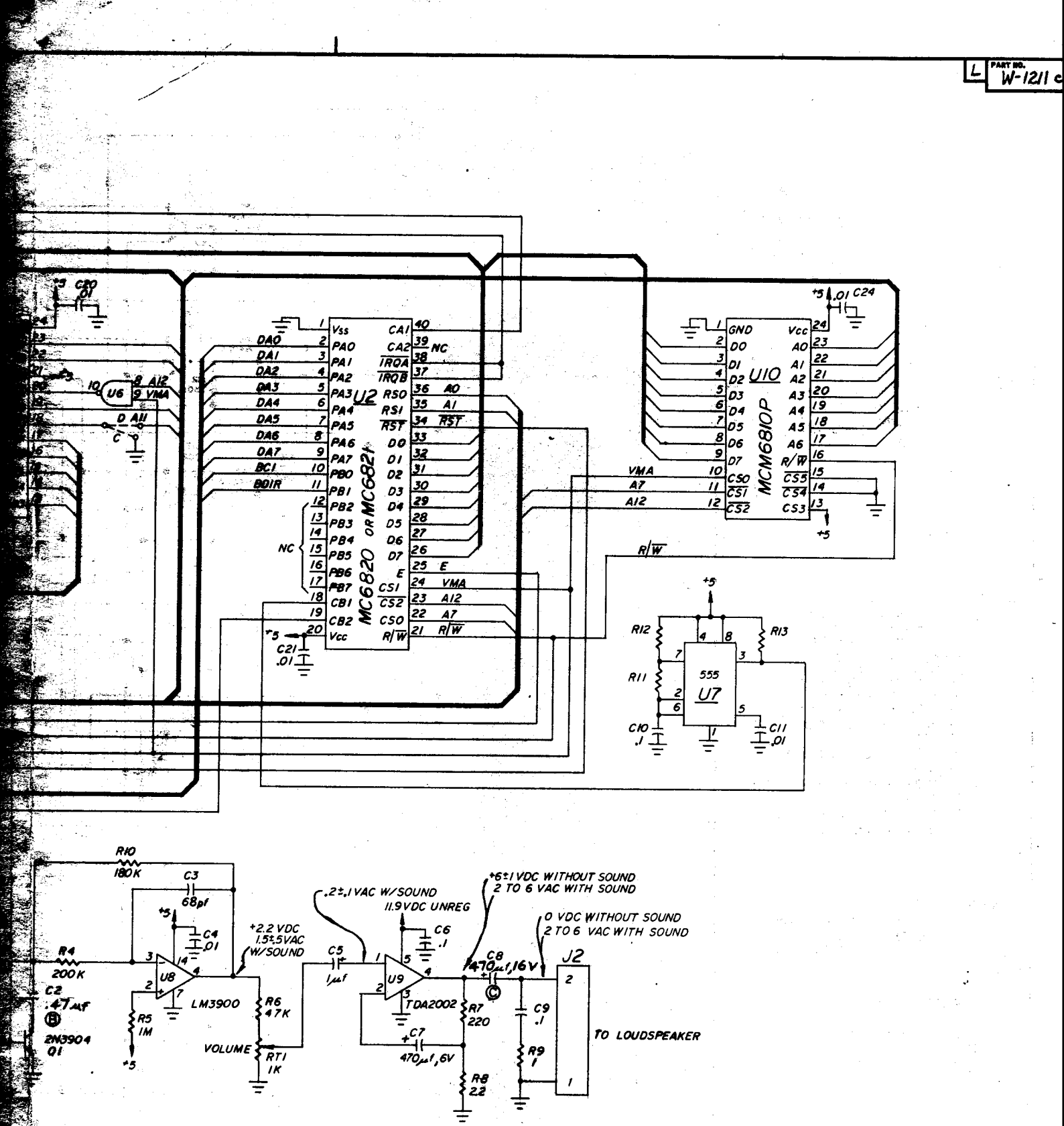

...IS USED (6802 WITHOUT U10).
" (6808/6810, U10).
" (GI 9316B INTEL 2716 OR EQUIV.).
" (TI TMS 2532 TMS 4732 OR EQUIV.).
...ON THIS ASSEMBLY.
...RESISTOR VALUES ARE IN OHMS,
...D'S.
...IS WITH A8.

ALL DESIGN, OPERATIVE AND PROCESS DATA PERTAINING TO THE ARTICLE SHOWN ON THIS SHEET IS THE PROPERTY OF BALLY MFG. CHICAGO, ILL. THIS INFORMATION IS DISCLOSED IN CONFIDENCE AND IS NOT TO BE COPIED, REPRODUCED, REVEALED TO OR APPROPRIATED BY O... IN PART OR IN WHOLE, WITHOUT THE EXPRESS CONSENT OF THE OWNERS. THE PRINT IS LOANED AND MUST NOT BE USED IN ANY M... DETRIMENTAL TO THE INTEREST OF THE OWNERS, AND MUST BE RETURNED ON DEMAND.

NO.	LET.	CHANGE	DATE	BY
3	C	WAS 220uf 25V	1-29-80	J.D.
2	B	WAS .1	1-29-80	J.D.
1	A	TEST INFO ADDED	12-11-79	NRW

REMOVE ALL BURRS
TOLERANCES ON DIMENSIONS UNLESS OTHERWISE SPECIFIED
FRACTIONS ± .008
DECIMALS ± .003
EXCEPT HOLE DIA.'S
ANGLES ± 1/2°
DO NOT SCALE DRAWING

DR. BY NRW DATE 9-13-79
CK. BY DBM DATE 9-19-79
APP'D BY DATE 9-19-79
APP'D BY DATE 9/19/79
FINISH:
HARDENING:

SEP 2? 1979

Bally MANUFACTURING CORP.
2640 BELMONT AVENUE
CHICAGO, ILLINOIS

#117

PRINT CONTROL | DIE SIZE | C.C. | FT. PER M. | LBS. PER M.

NAME COMPUTER SOUND MODULE A8 SCHEMATIC

ASSEM. NO. USED AS-2518-51

MATERIAL

CODE

PART NO. W-1211 c

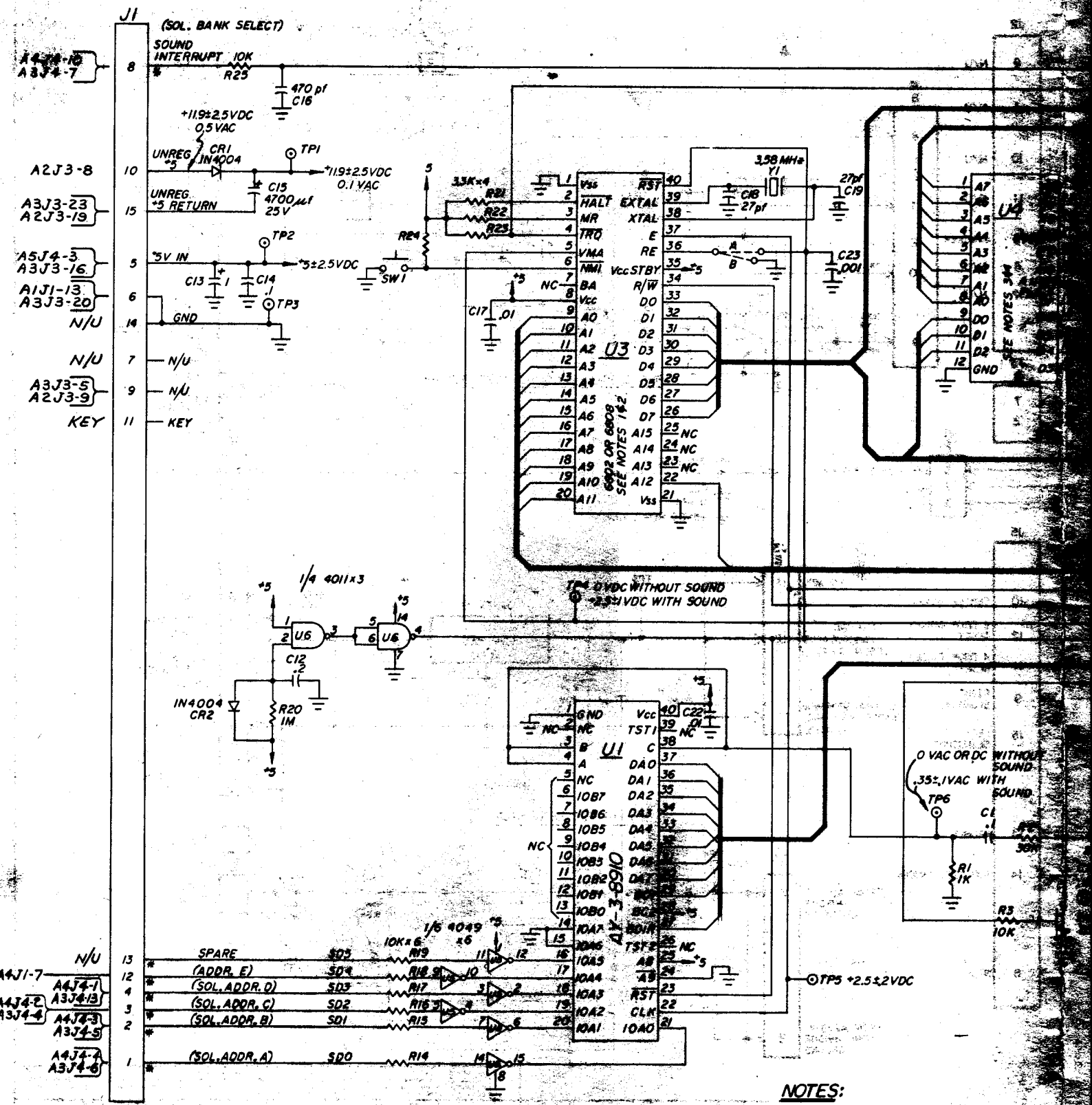

NOTES:

1. USE JUMPER A IF INTERNAL
2. " " B " EXTERNAL
3. " " C " 2K ROM (EPROM
4. " " D " 4K " "
5. U7, R12, R11, R13, C10, C11 NOT USED ON
6. UNLESS OTHERWISE INDICATED, ALL
   ALL CAPACITOR VALUES ARE IN
7. PREFIX ALL REFERENCE DESIGNA
8. * INDICATES "AID" TEST POINT

DRWR.	DEPT.	DESCRIPTION	TOOL NO.